MURR ELEKTRONIK

stay connected

IO-Link

Expansion Like No Other

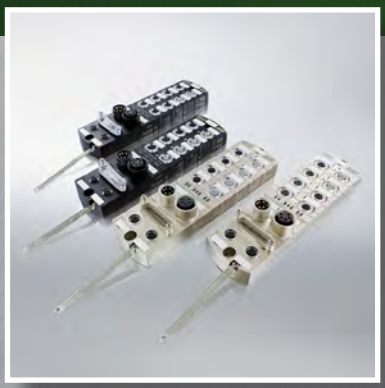

MVK METAL & IMPACT67

Murrelektronik's new compact IO-Link modules are the smartest way to connect Ethernet/IP IO-Link devices. Combine these modules with our variety of IO-Link hubs and analog converters to increase flexibility and reduce hardware costs.

High Performance

- Ethernet/IP QuickConnect (QC)
- Ethernet/IP Device Level Ring (DLR)
- ODVA CT15 compliant
- Simultaneous connection to multiple controllers

Multifunctional M12 ports

- IO-Link/DI/DO configurable channels
- Auto-configuration for standard I/O channels
- 1 A per IO-Link port
- 1.6 A per output

IO-Link

- IO-Link configuration tool for easy configuration
- Storage function allows IO-Link devices to be replaced without any additional tools
- Covers up to 76 digital signals when combined with Murrelektronik IO-Link hubs

SOLID67

Uses L-coded, M12 Power cables that can transmit up to 16A. Simpler installations, reduced cable runs.

A & B Dedicated IO Ports

30 and 60mm wide modules are ideal for installations with limited space.

Multiprotocol compatible modules. Turn the switch to change between protocols.

EMPARRO67 HYBRID

The innovative Emparro67 Hybrid is a switch mode power supply with many powerful features. It not only allows you to relocate the power supply from the control cabinet to the field but it also monitors currents using two integrated 24V DC load circuit monitoring channels to ensure system reliability. An IO-Link interface permits extensive and transparent communication.

ANALOG CONVERTER

Murrelektronik's IO-Link analog converter can be used to connect analog devices to an IO-Link master. It converts the analog signal to the IO-Link protocol. This makes it possible for sensors and actuators to be used in a variety of IO-Link applications without having to be integrated into installation concepts again and again. It is the quickest, easiest and most economical way to integrate analog devices into an IO-Link system.

IO-LINK HUB

With Murrelektronik's IO-Link hubs, several digital sensors and actuators can easily be connected via a standard sensor cable to an IO-Link master.

MVP12-Metal IO-Link hubs automatically transmit diagnostic data, down to the individual channel, directly to the control unit without parameterization. If an error occurs, the affected hub port is disabled.

The Murrelektronik Basic IO-Link hub, is an economical solution for high-quality decentralized installation.

INDUCTIVE COUPLER

Murrelektronik's IO-Link inductive couplers transmit power and bidirectional IO-Link communication contactlessly across an air gap. This prevents mechanical wear from occurring and is an ideal solution for replacing heavily stressed slip rings.

Typical applications include tool changers, feed units and rotary indexing machines - areas in which power and data need to be transmitted to movable machine and system parts.

MURR ELEKTRONIK

stay connected

IODD MANAGEMENT

Murrelektronik uses two methods to maintain compatibility with IO-Link IODD files. We recommend the following tools be considered when setting the system parameters for IO-Link Devices on our hardware platforms:

For Impact67/MVK/Solid67
The use of an external software tool is needed to set the parameters of the IO-Link Device. The IODD file needs to be imported into this software tool before using with a PLC.

IO-Link Tool:

Location of Murrelektronik Software tools:

For Cube67:
Cube67 Ethernet/IP utilizes a web browser functions that allows for the management of IODD files of IO-Link devices.

All parameters can be managed in one location for all compatible IO-Link devices. No external software is required.

To locate IODD files we recommend you start here with the IO-Link devices located on IODDfinder.com

IODD Files:

CUBE67+ with IO-LINK

Cube67+ is an IP67 rated, fully distributed I/O system with proven reliability in industrial applications. It can connect up to 32 I/O modules within a 60m range.

Cube67+ supports multiple protocols including Ethernet/IP, EtherCAT, ProfiBus and ProfiNet. Bus nodes have an integrated Power-T as well as communication switch connections, giving you the ability to daisy chain multiple devices together with other items on the bus network.

Cube67+ has advanced diagnostic functions including pin level LED diagnostics and, with the Ethernet/IP bus node, a built in web browser function is available for both diagnostics and system overview without the need of a PLC.

Absolute flexibility in system design is achieved with Cube67+. Blending modules between IP67 rated applications and IP20 cabinet solutions allows the user and installer to achieve installation and maintenance in the most efficient ways.

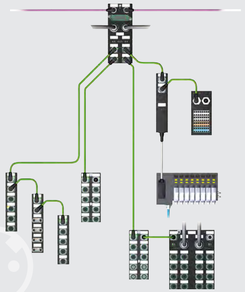

FEATURES

- IP67 rating
- Up to 1024 I/O connections
- Ethernet/IP with a web based diagnostic tool
- Pin level LED diagnostics
- Short circuit and overload protection
- Robotic rated system cable with power & communication
- Integrated Ethernet switch
- Integrated Power-T
- Max. 16 modules per segment or 32 per node
- Max. 30m cable connections/segment or 60m/node

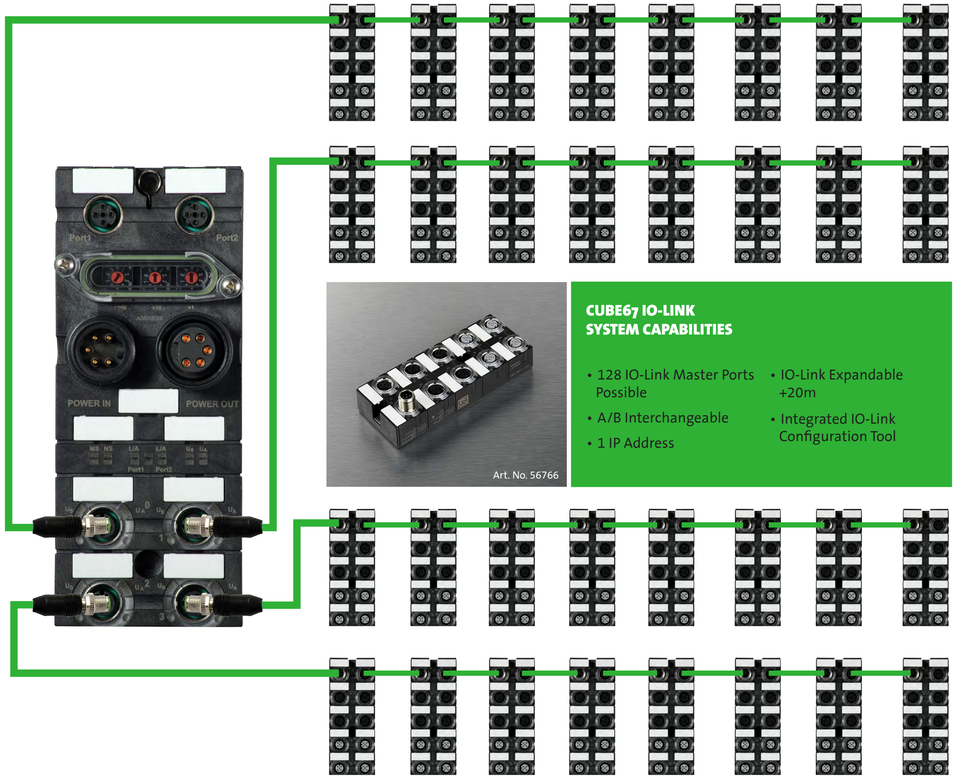

CUBE67 IO-LINK SYSTEM CAPABILITIES

- 128 IO-Link Master Ports Possible
- A/B Interchangeable
- 1 IP Address
- IO-Link Expandable +20m
- Integrated IO-Link Configuration Tool

SAMPLE SYSTEM SOLUTIONS with IO-Link

MURR ELEKTRONIK
stay connected

CUBE67

Up to 128 IO-Link Class A/B Hybrid Ports

1. 24V DC
2. DI/DO
3. o
4. CIQ-DI-DO
5. oV

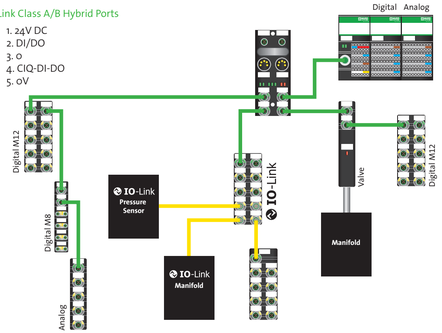

IMPACT67

4 IO-Link Class A/B Hybrid Ports

1. 24V DC
2. DI/DO
3. oV
4. CIQ-DI-DO
5. oV

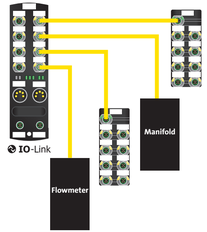

SOLID67

4 IO-Link Class A Ports

1. 24V DC
2. DI
3. oV
4. CIQ-DI-DO

4 IO-Link Class B Ports

1. 24V DC
2. 24V DC AUX
3. oV
4. CIQ-DI-DO
5. oV AUX

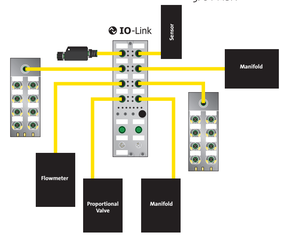

ORDERING INFORMATION

CUBE67+ with IO-LINK

Module	Cube67+ DIO12 IOL4 V1.1 E 8xM12	Cube67+ DIO12 IOL4 V1.1 E 8xM12 HD
Art. Number	56766	5676660
Technical Data		
IO-Link (M12)	max. 4 A/B hybrid ports, v1.12, Com1/Com2/Com3, up to 700mA load	
Input (M12)	up to 12x, acc. to EN 61131-2, Type 2 (200mA), single ch. protection	
Output (M12)	up to 8x, max. 1.6A per output, cycle frequency max. 50Hz, single ch. protection	
Power	max. 4A sensor & 4A actuator supply	
Housing	Plastic	Stainless steel
IP rating	IP67	IP69K

IO-LINK INDUCTIVE COUPLER

Description	Technical Data	Art. No.
Primary IO-Link Coupler	Voltage: 24V DC ±10 % Ambient Temperature: -20 to +55°C Transmission Funct.: IO-Link V. 1.1, Class A Port Protection Rating: IP67, IP68 Electrical Conn: 4-pole, A-coded M12 Male Design: M30 x 1.5 Threaded Barrel	59450
Secondary IO-Link Coupler		59451
Universal Holder	Design: M30 x 1.5 adjustable	59452

IO-LINK HUBS

	DI8 DO8 IOL K3	DI16 IOL	DI16 IOL	DI8 DO8 IOL
Article Number	55518	55519	59401	59402
IO-Link (M12)				
Specification	Version 1.1			
Port Class	Type B (Galv. Iso.)	Type A	Type A	Type B
COM2 (38.4 kBaud)	Yes			
Input (M12)	8x	16x	16x	8x
24V DC (EN 61131-2), PNP (EN 61131-2), Type 3, max. 100mA				
Output (M12)	8x			8x
24V DC (EN 61131-2) max. 4A, max. 0.4A				

IO-LINK ANALOG CONVERTER

	Signal Shape	Article Number
Analog Input	0-20mA	5000-00501-1100000
	4-20mA	5000-00501-1110000
	0-10V	5000-00501-1200000
	-10±10V	5000-00501-1210000
	0-20mA, 4-20mA, 0-10V, -10±10V	5000-00501-1300001
Analog Output	0-20mA	5000-00501-2100000
	4-20mA	5000-00501-2110000
	0-10V	5000-00501-2200000
	-10±10V	5000-00501-2210000
	0-20mA, 4-20mA, 0-10V, -10±10V	5000-00501-2300001

IMPACT67/MVK METAL with IO-LINK

Family	MVK Metal		Impact67	
Module	DIO14 DIO2/IOL2 4P	DIO12 DIO4/IOL4 4P	DIO14 DIO2/IOL2 4P	DIO12 DIO4/IOL4 4P
Article No.	55543	55544	55143	55144
Technical Data				
Device Level Ring	Yes, beacon-based ring node			
QuickConnect Support	Yes			
Multiple Connections	Yes, 1 exclusive owner and 2 listen-only connections			
Multifunction Channels	M12 Ports			
Power	7/8" 4-pole (max. 9A sensor & 9A actuator supply)			
Digital In	Acc. to EN 61131-2, Type 3 (220mA), single ch. protection			
Digital Out	Max. 1.6A per output cycle frequency max. 50Hz, single channel protection			
IO-Link	V 1.12/EN 61131-2 Type 1. Com1/Com2/Com3, automatic startup, up to 1A load			
IO-Link 1.1 Class B Port	Max. 2 (X6-7)	Max. 4 (X4-7)	Max. 2 (X6-7)	Max. 4 (X4-7)

SOLID67 with IO-LINK

Module	IOL8 (60mm)	IOL8 (30mm)	IOL8 (M8 5P, 30mm)
Article Number	54504	54505	54506
Connections			
Power	L-coded, M12 Power, 5-pole, max. 16A		
I/O Ports	M12 5-pole, A-coded		M8 5-pole, B-coded
IO-Link			
IO-Link	8 x Master (X1-X8)		
Oper. Modes	COM1; COM2; COM3		
Port Class	4 x Type A (X1-X4), 4 x Type B (X5-X8, galv. isolated)		
Specification	IO-Link Master V1.1		
Input			
Sensor Power Supply	Max. 500mA/Port (Pin 1 & Pin 3)		
No. of Channels	Max. 12, 4 x (Pin 2, Fixed) + 8 x (Pin 4)*		
Type	For 3-wire sensors or mechanical switches, PNP, IO-Link Devices		
Output			
No. of Channels	Max. 12, 8 x (Pin 4)* + 4 x (Pin 2/5 Uaux)*		Max. 8 x (Pin 4)*
Switching Current/Output	Max. 500mA (Pin 4, X1-X8)//2A (Pin 2/5 Uaux, X5-X8)*		Max. 500mA (Pin 4, X1-X8)

MURR ELEKTRONIK

stay connected

1327 Northbrook Parkway, Suite 460 | Suwanee, GA 30024
P: 770-497-9292 | F: 770-497-9391 | murrinc.com

IO-LINK | 11.18 | US-IOL-2018