SPPC

SINGLE POLE POWER CONNECTORS

SPPC-PWL-2.0: Power connectors, 500A
SPPC-PWL: Power connectors, 400A / 750A
SPPC-HK:Compact power connectors, 250A /400A
SPPC-LJP: Lug Joint Protector

Radiall™ | VanSystem

About Us

Since 1952, Radiall Sa have been enabling the future through collaboration with our customers.
The results are a range of innovative and award-winning products that customers trust for unrivaled repeatability and performance.

Radiall Sa are a global company with facilities around the world that specializes in manufacturing the highest quality interconnect components to support the most demanding applications.

At Radiall, you can rely on us to be the industry's global market leader.

VanSystem was a company founded in Lombardy - Italy, which has been operating since 1985 in the industrial market.
Since 2015 VanSystem is a Radiall company.

Besides connectors with screw or bayonet coupling complying with the Mil-DTL-5015 standard, we designs and manufactures non-standard products for special applications.
One of our's strong points is an agile and dynamic organizational structure which enables direct and constant interaction with customers in order to meet all their requirements and build solid, long-term partnerships.
Our team's professionalism, skill and commitment are at your service to help you achieve the solution you are looking for.

Radiall Italia S.r.l. Quality System is qualified according to ISO 9001:2015 and ISO/TS 22163:2017

Page 6

SPPC-PWL-2.0

Single Pole Power Connectors 500A:

Single-pole power connectors are designed to provide safe, reliable and quick connections for cable-to-cable or cable-to-equipment in electrical power distribution systems.

- 5-key polarization system and color coding prevent connection errors
- Up to 500 A, 1.000 V
- From 35 mm² to 150 mm² wire section
- IP67 when mated (according to EN 60529)
- Finger Protected IP2x: pin and socket contacts
- Multi-louver contact system
- KSPC: keyed single-pole connector, individual keyways to prevent connection errors
- Certified (S150 version)
- C US Certified (S150, T5 and TH5 version)

Page 16

SPPC-PWL

Single Pole Power Connectors 400A/750A:

Single-pole power connectors are designed to provide safe, reliable and quick connections for cable-to-cable or cable-to-equipment in electrical power distribution systems.

- 5-key polarization system and color coding prevent connection errors
- Up to 750 A, 1.000 V
- From 35 mm² to 300 mm² wire section
- IP67 when mated (according to EN 60529)
- Finger Protected IP2x: pin and socket contacts
- Multi-louver contact system
- KSPC: keyed single-pole connector, individual keyways to prevent connection errors
- Certified (750A version)
- C US Certified (S120 and T4 version)

Page 36

SPPC-HK

Compact Single Pole Power Connectors 250A/400A:

Single-pole power connectors up to 400 amps, keyed, fingerproof both sides, innovative locking mechanism.

- 5-key polarization system and color coding prevent connection errors
- Up to 400 A, 1.200 V
- From 16 mm² to 120 mm² wire section
- Multi-louver contact system
- Reduced flange size option
- No special tool is required for assembly or uncoupling
- Spring locking axial action
- IP67 when mated (according to EN 60529)
- IP2x finger-protected contacts
- KSPC: keyed single pole connector, individual keyways to prevent connection errors

Page 49

SPPC LJP

Lug Joint Protector:

LJP is a safe and reliable temporary connection/extension of single core power cables that are pre-terminated with copper lug terminals.

- Up to 780 A, 1.000 V
- IP67 when mated (according to EN 60529)
- Accepts 120 mm², 185 mm², 240 mm² and 300 mm² lugs with holes size 12 mm
- Different lug sizes can be assembled in the same unit using special accessories

SPPC-PWL/ SPPC-PWL-2.0 Connectors - Introduction

Single Pole Power Connector

Single Pole Power Connectors have become widely adopted in a diverse range of applications and industries.

APPLICATIONS:

- Power distribution
- Utilities
- Electric Vehicles
- Railway Equipment
- Military Field Power
- Mobile Generators
- Loadbanks
- Back-up Power Systems

SPPC-PWL-2.0 (LS/LD only)
PPC-PWL (750A version only)

SPPC-PWL (400A only)
SPPC-PWL-2.0

File N. E483437

KEY CHARACTERISTICS:

- 500 Mating Cycles minimum
- Intermateable with other versions
- IP2X Finger Protected contacts
- IP67 sealed when mated
- Remote tool required to release the secondary locking of the mated connectors
- For use with Electrical Power Cables
- Heavy Duty Hand Grips
- Clip retained contacts
- Cotter pin required for panel mount connectors
- Cable sizes from 35mm² to 300mm²
- Facilitate cables up to 37mm Ø
- High Impact Insulators
- Harmonised Colour Coding
- CE Compliant
- EN/ESI compliant Creepage and Clearance distances
- Multi-louver contact system
- Mechanically keyed to prevent connection errors
- Permanent Phase Marking
- Set Screw and Crimp contact versions
- UL94 VO Flame Retardant
- Field Assembly & Repair
- Extraction tool required
- Eaisy Chain hook up system

FEATURES AND BENEFITS:

- Connectors coding key to prevent possible wrong connections.
- Mechanical key associated to harmonized colour system i.e. A Phase Line cannot be connected into Earth Line etc. i.e. in Europe Phase 1 is always brown
- secondary locking system

SPPC-PWL/ SPPC-PWL-2.0 Connectors - Introduction

Single Pole Power Connector

POWER CONNECTORS TYPES:

- **Source: Socket** connector is the source of the power, it receives and holds the Pin connector.
- **Drain: Pin** connectors receives and holds the Socket connector. The Drain connectors have a pin for the secondary locking (locks into the source connectors) The release key is required to unlock the secondary locking pin.

- **Cable/line: source (1) or drain (2)** is a moveable connectors fitted to a cable. The contacts are available in crimp or screw terminal.
- **Panel: source (3) or drain (4)** receptacle connectors to be fixed to a panel.

Power connectors cannot be mated/unmated under voltage or underloaded.

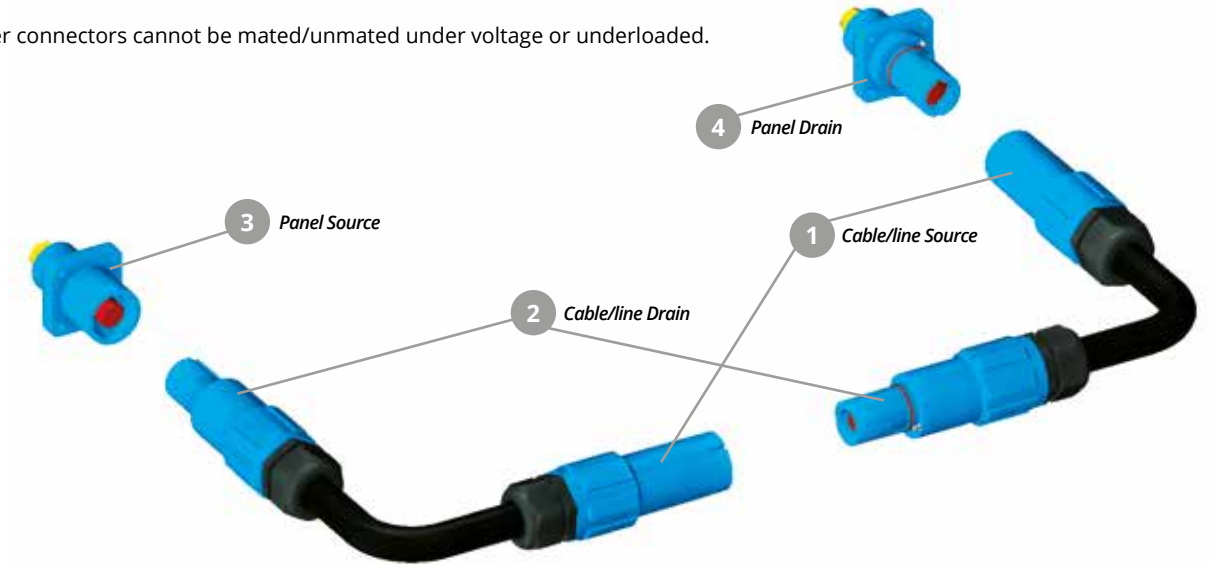

MECHANICALLY KEYED TO PREVENT CONNECTION ERRORS

Panel or Cable/Line
Source Phase L1

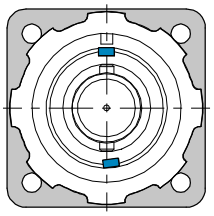

Panel or Cable/Line
Source Phase L2

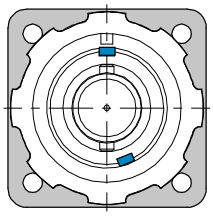

Panel or Cable/Line
Source Phase L3

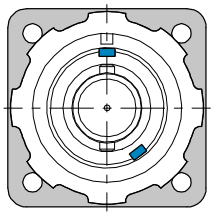

Panel or Cable/Line
Source Neutral

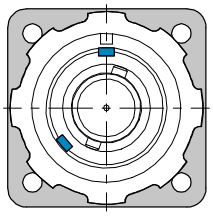

Panel or Cable/Line
Source Earth

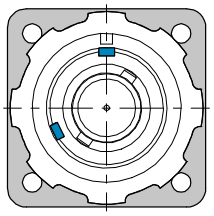

Panel or Cable/Line
Drain Phase L1

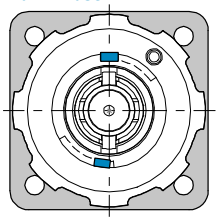

Panel or Cable/Line
Drain Phase L2

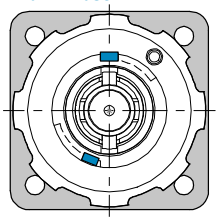

Panel or Cable/Line
Drain Phase L3

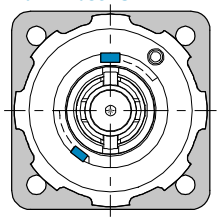

Panel or Cable/Line
Drain Neutral

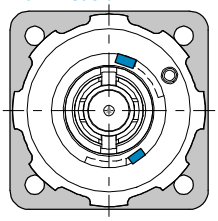

Panel or Cable/Line
Drain Earth

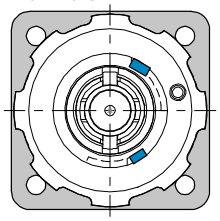

COLOUR CODING

Standard	Phase L1	Phase L2	Phase L3	Neutral	Earth
Europe	Brown (BR)	Black (BK)	Grey (GY)	Blue (BU)	Green (GN)
USA (*)	Black (BK)	Red (RD)	Blue (BU)	White (WH)	Green (GN)
Australia (*)	Red (RD)	White (WH)	Blue (BU)	Black (BK)	Green (GN)
Direct current DC	-	Red (RD)	-	Black (BK)	Green (GN)

** Color set on request*

SPPC-PWL-2.0 Connectors - Part number explanation

SPPC-PWL-2.0	LS	L1	BR	S-150	M	BM	

P/N Sample: SPPC-PWL-2.0-LS-L1-BR-2-150

SPPC-PWL-2.0	**Series Code**	**SPPC-PWL-2.0**	Single Pole Power connectors
LS	**Connector Type**	**LS**	Cable/Line Source
		LD	Cable/Line Drain
		PS	Panel Source
		PD	Panel Drain
L1	**Key Position**	**E**	Earth
		N	Neutral
		L1	Phase 1
		L2	Phase 2
		L3	Phase 3
BR	**Insulator Color**	**BR**	Brown
		BK	Black
		GY	Grey
		BU	Blue
		GN	Green
S-150	**Contact Termination**	**S-150**	Screw terminal – 500A up to 150mm^2
		M12-T5	M12 Threaded post – 500A
		TH5	Threaded hole – 500A
M	**Cable External diameter**	**ES**	7mm – 15mm
		S	15mm – 23mm
		M	19mm – 28mm
		OS	22mm – 32mm
BM	**Contacts Type**	**-**	Standard contacts
		BM	Bimetallic Contacts
	Customization		

LINE DRAIN WITH INTEGRATED LOCKING RETENTION SYSTEM

Easy and Fast Disconnection

The Line Drain integrated Locking Retention System has been developed for a quick disconnection without Release Key supplement.

SPPC-PWL-2.0 Connectors - Characteristics

Integrated Locking Retention System

1. Cable connectors mated and held in place via the secondary locking pin.

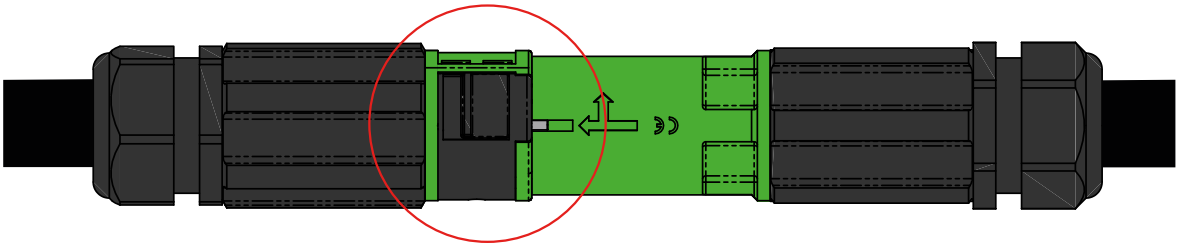

2. Release integrated sliding release key.

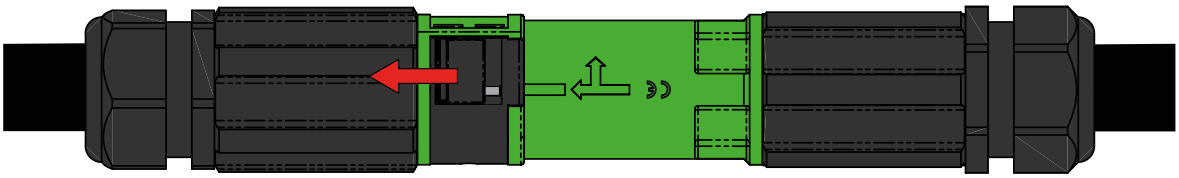

3. Twist to disengage key way.

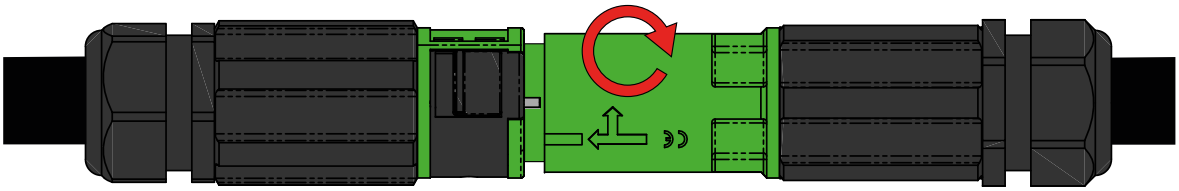

4. Uncouple connectors.
Warning – Do not uncouple under load.

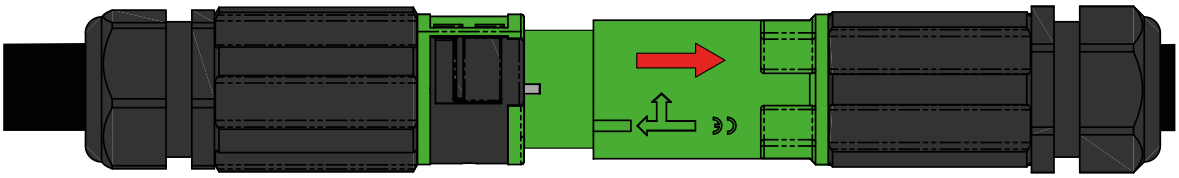

SPPC-PWL-2.0 Connectors - Disassembly Instruction Guide

1. Turn gland anti-clockwise to loosen.

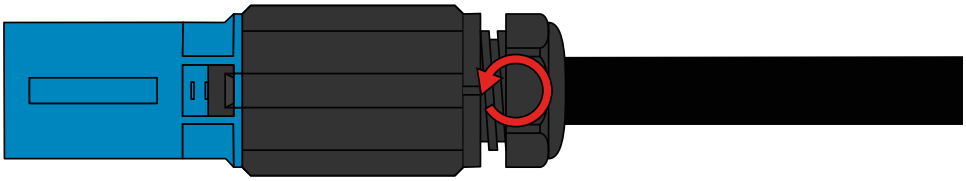

2. Unclip locator pin with small flat screwdriver.

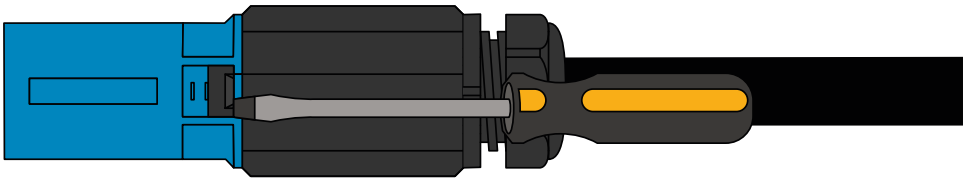

3. Slide locator pin down to unsecure it.

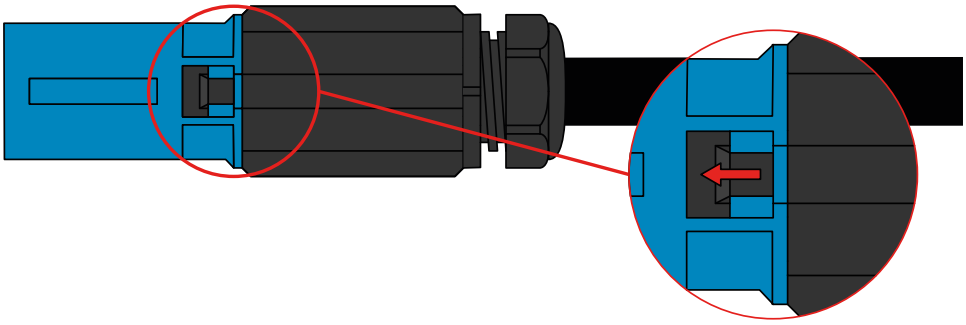

4. Turn backshell anti-clockwise to unscrew from front end.

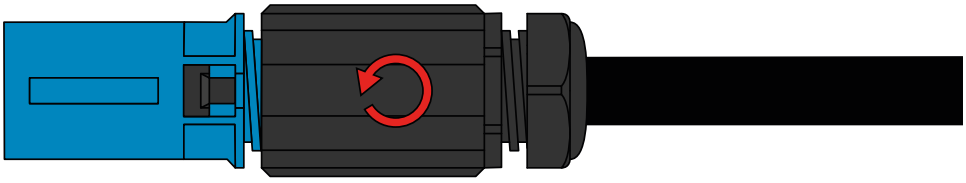

5. Remove front end from contact and slide backshell up the cable.

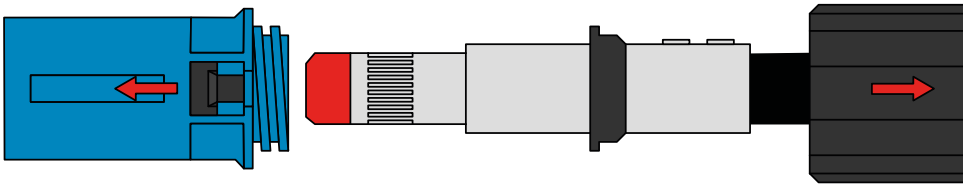

SPPC-PWL-2.0 Connectors - Assembly Instruction Guide

1. Remove packaging and disassemble connector by sliding locator pin up to unsecure, then turn backshell counter clockwise to remove and slide out contact.

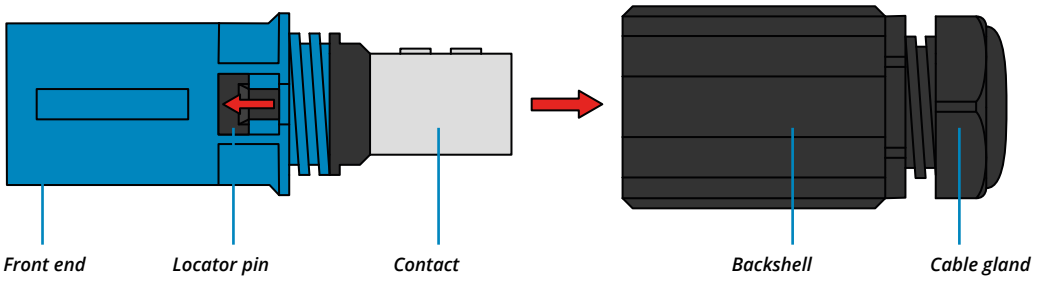

2. To reassemble, slide backshell and cable gland down the cable, fully insert terminated contact into the front end.
Please note, on pin contact (as shown below) slotted keyway in contact must align with keyway in moulding.
Not required on socket line drain.

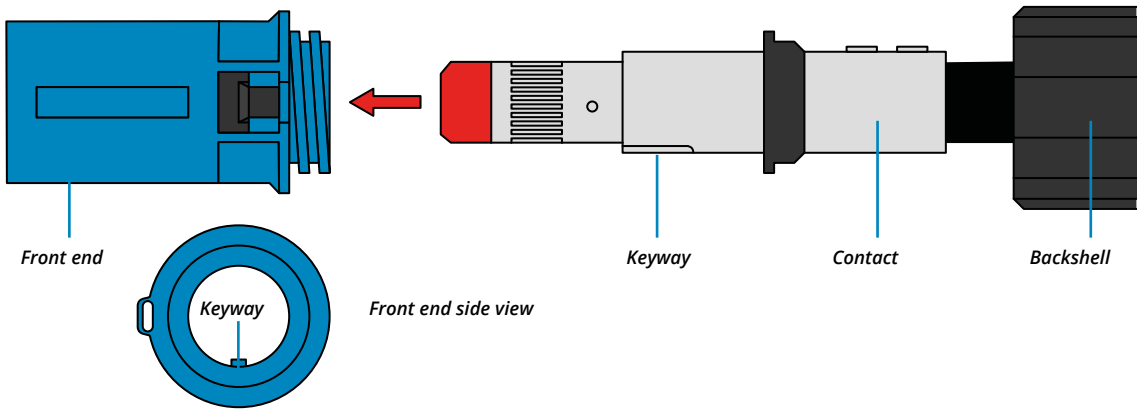

3. Place the backshell over the contact to connect with front end.

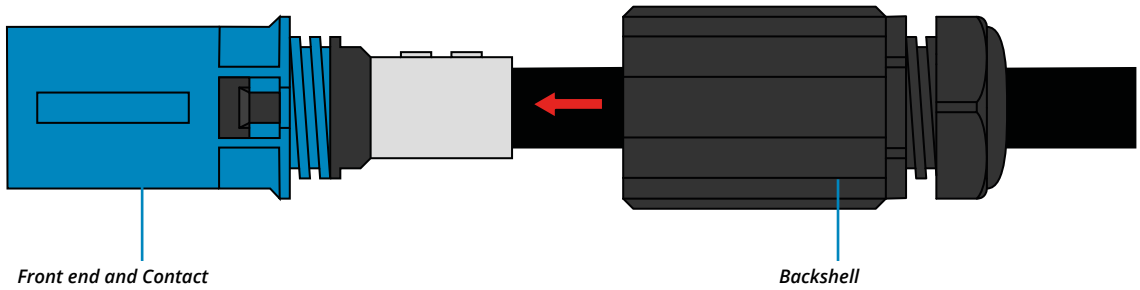

4. Turn backshell clockwise to screw into front end, making sure the hole on backshell is lined up with front end locator pin.

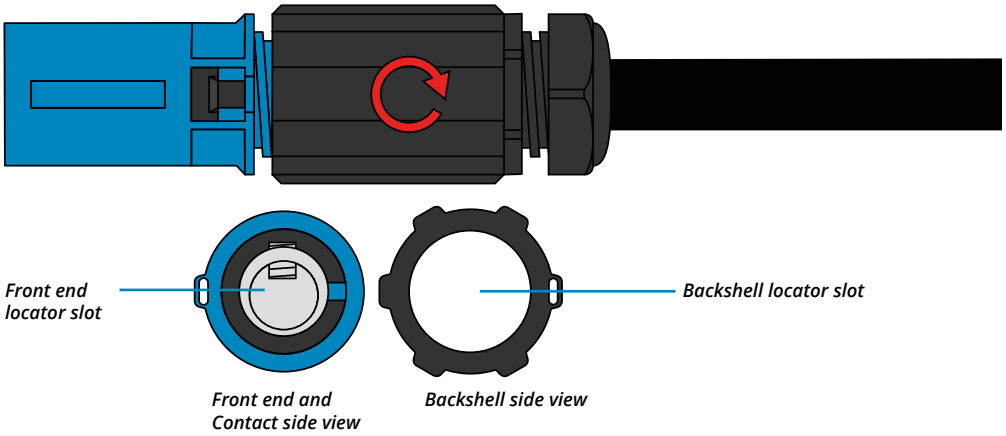

5. Slide locator pin up to make it secure.

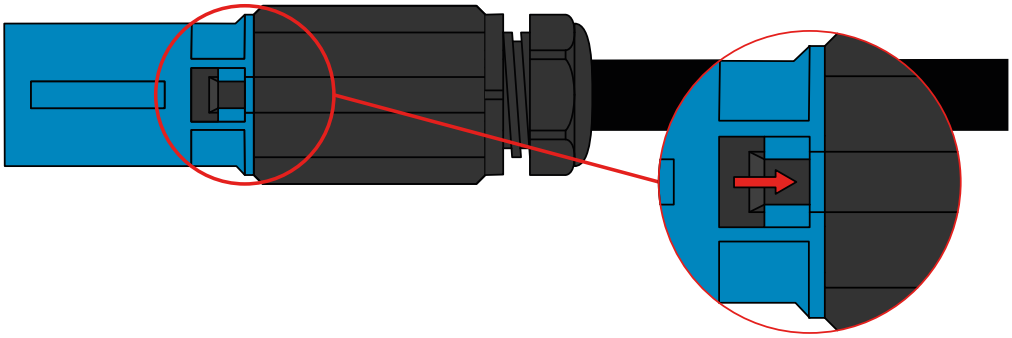

6. *Completed.*

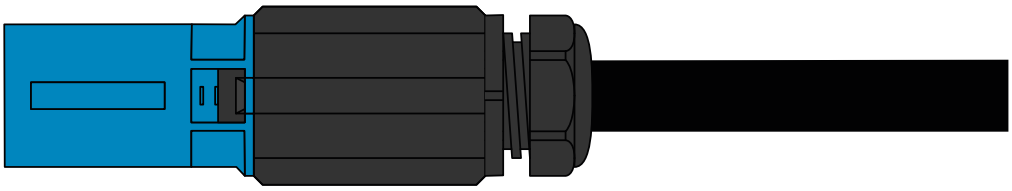

SPPC-PWL-2.0 Connectors - Cable/Line drain - 1000V

500A

Screws terminal for conductor up to 150mm²**

Color*		Short Description	Part Number			
	Brown – Phase L1	SPPC-PWL-2.0-LD-L1-BR-S-150-M	VS392501			Certified
	Black – Phase L2	SPPC-PWL-2.0-LD-L2-BK-S-150-M	VS392502			Certified
	Grey – Phase L3	SPPC-PWL-2.0-LD-L3-GY-S-150-M	VS392503			Certified
	Blue – Neutral	SPPC-PWL-2.0-LD-N-BU-S-150-M	VS392504			Certified
	Green – Earth	SPPC-PWL-2.0-LD-E-GN-S-150-M	VS392505			Certified

*** Sleeves included, for cable conductor size 35 mm² - 50 mm² - 70 mm² - 95 mm² - 120 mm²- 150 mm²*
(Up to maximum diameter 16.5mm). Insulating strip 33mm.

**European Harmonized Color Set, others colors set on request*

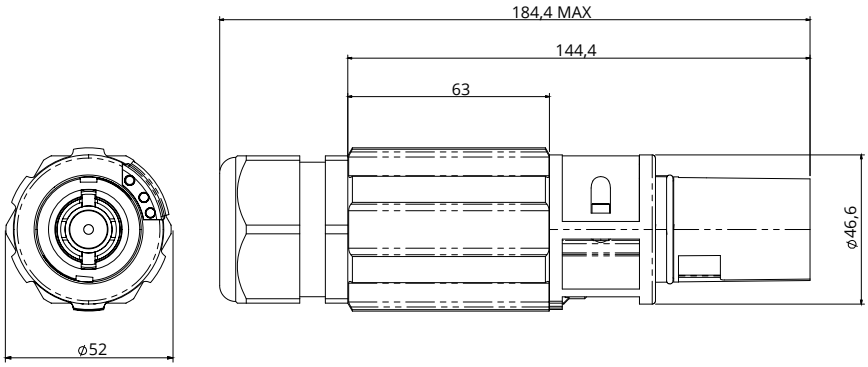

SPPC-PWL-2.0 Connectors - Cable/Line source - 1000V

500A

Screws terminal for conductor up to 150mm²**

Color*	Short Description	Part Number			
Brown – Phase L1	SPPC-PWL-2.0-LS-L1-BR-S-150-M	VS392506			Certified
Black – Phase L2	SPPC-PWL-2.0-LS-L2-BK-S-150-M	VS392507			Certified
Grey – Phase L3	SPPC-PWL-2.0-LS-L3-GY-S-150-M	VS392508			Certified
Blue – Neutral	SPPC-PWL-2.0-LS-N-BU-S-150-M	VS392509			Certified
Green – Earth	SPPC-PWL-2.0-LS-E-GN-S-150-M	VS392510			Certified

*** Sleeves included, for cable conductor size 35 mm² - 50 mm² - 70 mm² - 95 mm² - 120 mm²- 150 mm²*
(Up to maximum diameter 16.5mm). Insulating strip 33mm.

**European Harmonized Color Set, others colors set on request*

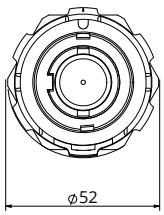

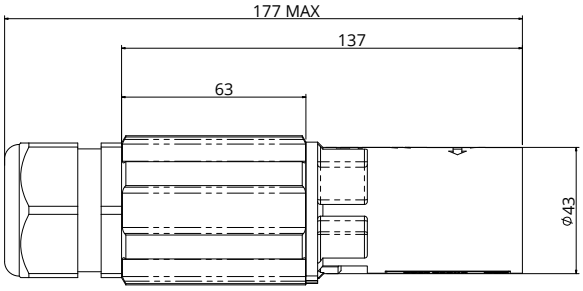

SPPC-PWL-2.0 Connectors - Panel drain - 1000V

500A
M12 Threaded post for conductor up to 300mm²

Color*	Short Description	Part Number		
Brown – Phase L1	SPPC-PWL-2.0-PD-L1-BR-M12-T5	VS392511		Certified
Black – Phase L2	SPPC-PWL-2.0-PD-L2-BK-M12-T5	VS392512		Certified
Grey – Phase L3	SPPC-PWL-2.0-PD-L3-GY-M12-T5	VS392513		Certified
Blue – Neutral	SPPC-PWL-2.0-PD-N-BU-M12-T5	VS392514		Certified
Green – Earth	SPPC-PWL-2.0-PD-E-GN-M12-T5	VS392515		Certified

500A
Threaded Hole

Color*	Short Description	Part Number		
Brown – Phase L1	SPPC-PWL-2.0-PD-L1-BR-TH5	VS392521		Certified
Black – Phase L2	SPPC-PWL-2.0-PD-L2-BK-TH5	VS392522		Certified
Grey – Phase L3	SPPC-PWL-2.0-PD-L3-GY-TH5	VS392523		Certified
Blue – Neutral	SPPC-PWL-2.0-PD-N-BU-TH5	VS392524		Certified
Green – Earth	SPPC-PWL-2.0-PD-E-GN-TH5	VS392525		Certified

**European Harmonized Color Set, others colors set on request*

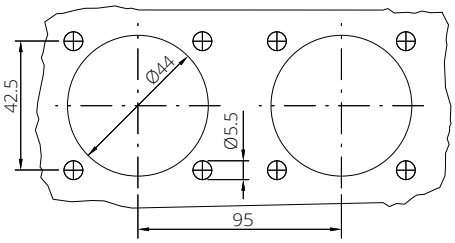

panel cut out

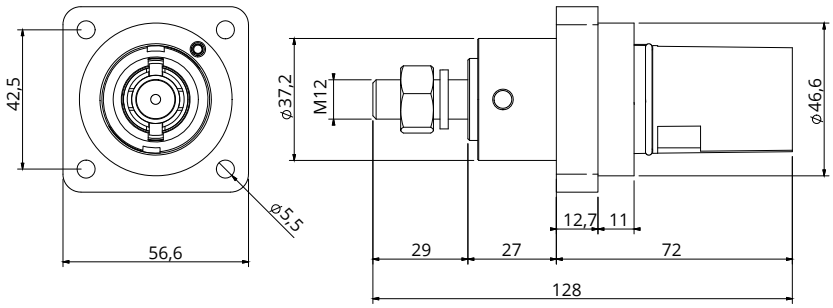

M12 Threaded post for conductor

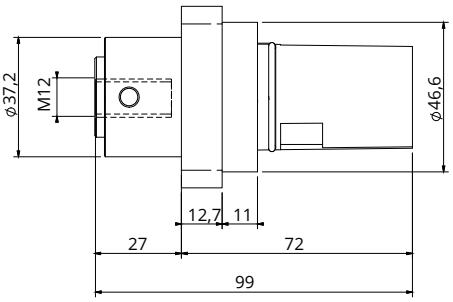

Threaded Hole

SPPC-PWL-2.0 Connectors - Panel source - 1000V

500A
M12 Threaded post for conductor up to 300mm²

Color*	Short Description	Part Number		
Brown – Phase L1	SPPC-PWL-2.0-PS-L1-BR-M12-T5	VS392516		Certified
Black – Phase L2	SPPC-PWL-2.0-PS-L2-BK-M12-T5	VS392517		Certified
Grey – Phase L3	SPPC-PWL-2.0-PS-L3-GY-M12-T5	VS392518		Certified
Blue – Neutral	SPPC-PWL-2.0-PS-N-BU-M12-T5	VS392519		Certified
Green – Earth	SPPC-PWL-2.0-PS-E-GN-M12-T5	VS392520		Certified

500A
Threaded Hole

Color*	Short Description	Part Number		
Brown – Phase L1	SPPC-PWL-2.0-PS-L1-BR-TH5	VS392526		Certified
Black – Phase L2	SPPC-PWL-2.0-PS-L2-BK-TH5	VS392527		Certified
Grey – Phase L3	SPPC-PWL-2.0-PS-L3-GY-TH5	VS392528		Certified
Blue – Neutral	SPPC-PWL-2.0-PS-N-BU-TH5	VS392529		Certified
Green – Earth	SPPC-PWL-2.0-PS-E-GN-TH5	VS392530		Certified

**European Harmonized Color Set, others colors set on request*

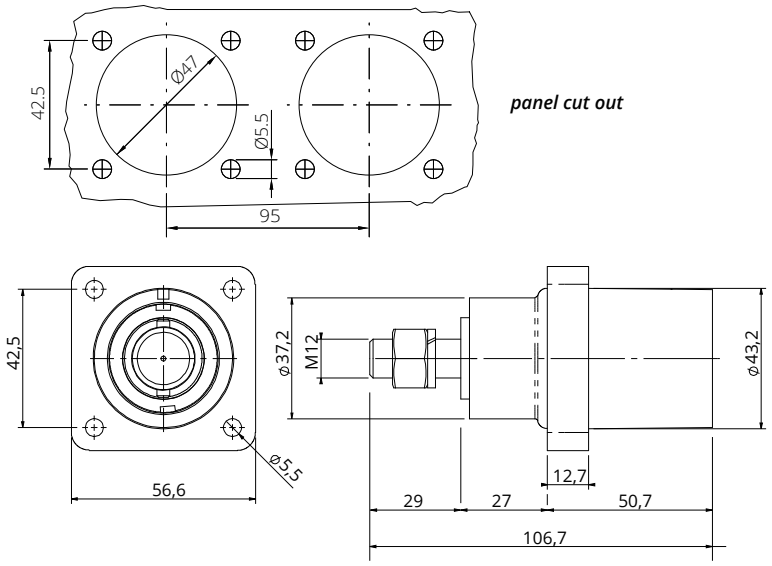

M12 Threaded post for conductor

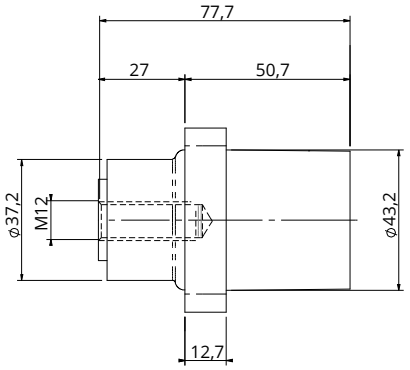

Threaded Hole

SPPC-PWL Connectors - Part number explanation

SPPC-PWL	LS	L1	BR	C-240	M	BM	

P/N Sample: SPPC-PWL-LS-L1-BR-C-240-M

SPPC-PWL	**Series Code**	**SPPC-PWL**		Single Pole Power connectors
LS	**Connector Type**	**LS**		Cable/Line Source
		LD		Cable/Line Drain
		PS		Panel Source
		PD		Panel Drain
L1	**Key Position**	**E**		Earth
		N		Neutral
		L1		Phase 1
		L2		Phase 2
		L3		Phase 3
BR	**Insulator Color**	**BR**		Brown
		BK		Black
		GY		Grey
		BU		Blue
		GN		Green
		RD		Red *(consult our sales office)*
		YL		Yellow *(consult our sales office)*
		WH		White *(consult our sales office)*
C-240	**Contact Termination***	**M12-T7**		M12 Threaded post – 750A
		M12-T4		M12 Threaded post – 400A
		S-120		Screw terminal – 400A up to 120mm²
		C-35		Crimp contacts – 500A 35mm²
		C-50		Crimp contacts – 500A 50mm²
		C-70		Crimp contacts – 500A 70mm²
		C-95		Crimp contacts – 500A 95mm²
		C-120		Crimp contacts – 500A 120mm²
		C-150		Crimp contacts – 500A 150mm²
		C-185		Crimp contacts – 750A 185mm²
		C-240		Crimp contacts – 750A 240mm²
		C-300		Crimp contacts – 750A 300mm²
		TH7		Threaded hole – 750A
		TH4		Threaded hole – 400A
		L		Contacts for Lug
M	**Cable External diameter**	**ES**		7mm – 15mm
		S		15mm – 23mm
		M		19mm – 28mm
		OS		22mm – 32mm
		M50		27mm – 35mm
		OS-M50		30mm - 38mm
BM	**Contacts Type**	**-**		Standard contacts
		BM		Bimetallic Contacts (400A / 500A)
	Customization			

** Permissible cable rating (A) to be checked with the specific cable characteristic*

SPPC-PWL Connectors - Dimensions

Panel Drain Connectors
M12 Threaded post for conductor

Panel Drain Connectors
Threaded Hole

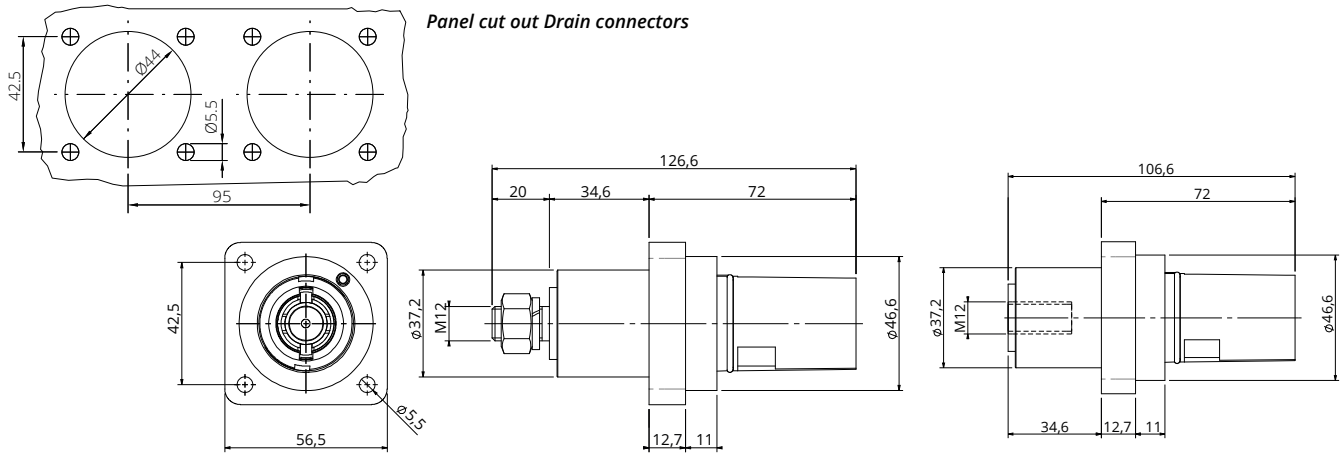

Panel Source Connectors
M12 Threaded post for conductor

Panel Source Connectors
Threaded Hole

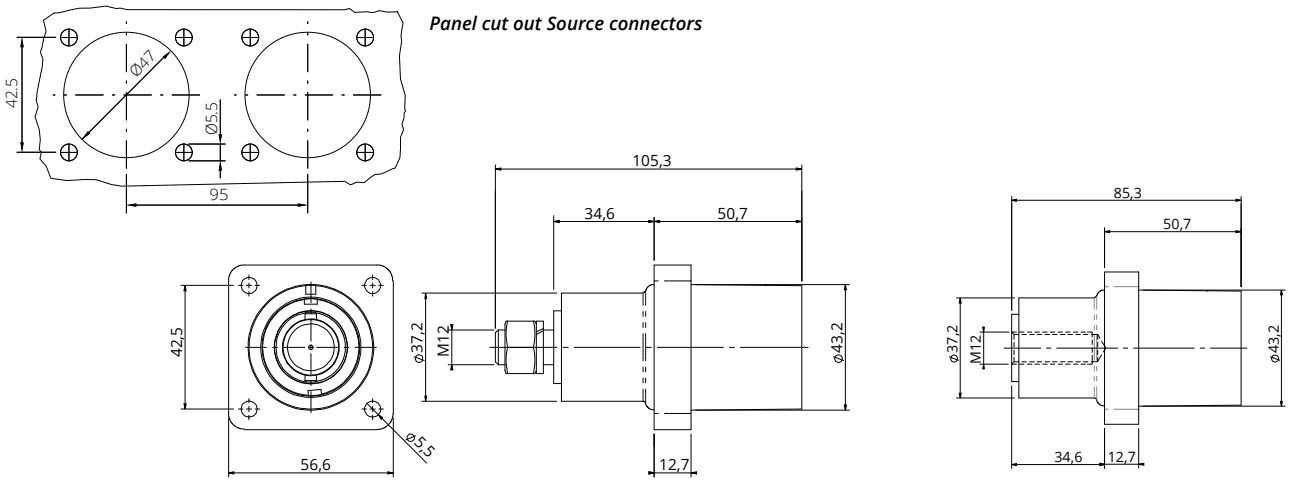

Cable/Line Source Connectors

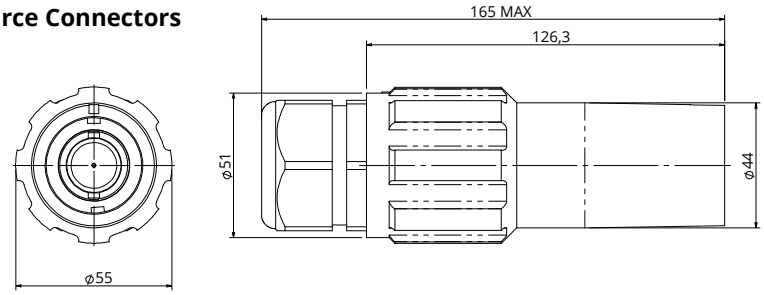

Cable/Line Drain Connectors

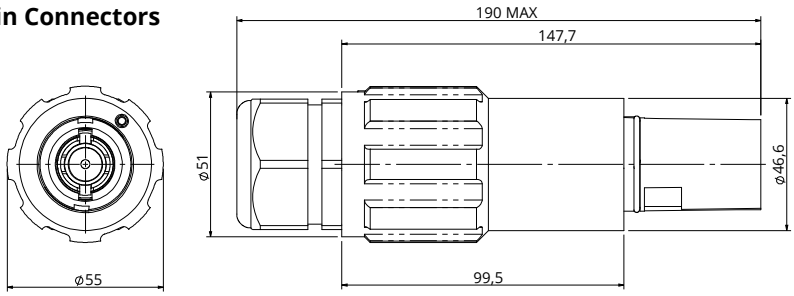

SPPC-PWL Connectors - Panel drain - 1000V

750A
M12 Threaded post for conductor up to 300mm²

Color*	Short Description	Part Number	
Brown – Phase L1	SPPC-PWL-PD-L1-BR-M12-T7	VS390110	Certified
Black – Phase L2	SPPC-PWL-PD-L2-BK-M12-T7	VS390111	Certified
Grey – Phase L3	SPPC-PWL-PD-L3-GY-M12-T7	VS390112	Certified
Blue – Neutral	SPPC-PWL-PD-N-BU-M12-T7	VS390113	Certified
Green – Earth	SPPC-PWL-PD-E-GN-M12-T7	VS390109	Certified

400A
M12 Threaded post for conductor up to 120mm²

Color*	Short Description	Part Number	
Brown – Phase L1	SPPC-PWL-PD-L1-BR-M12-T4	VS390070	Certified
Black – Phase L2	SPPC-PWL-PD-L2-BK-M12-T4	VS390071	Certified
Grey – Phase L3	SPPC-PWL-PD-L3-GY-M12-T4	VS390072	Certified
Blue – Neutral	SPPC-PWL-PD-N-BU-M12-T4	VS390068	Certified
Green – Earth	SPPC-PWL-PD-E-GN-M12-T4	VS390263	Certified

750A
Threaded Hole

Color*	Short Description	Part Number	
Brown – Phase L1	SPPC-PWL-PD-L1-BR-TH7	VS390280	Certified
Black – Phase L2	SPPC-PWL-PD-L2-BK-TH7	VS390281	Certified
Grey – Phase L3	SPPC-PWL-PD-L3-GY-TH7	VS390282	Certified
Blue – Neutral	SPPC-PWL-PD-N-BU-TH7	VS390283	Certified
Green – Earth	SPPC-PWL-PD-E-GN-TH7	VS390284	Certified

**European Harmonized Color Set, others colors set on request*

SPPC-PWL Connectors - Panel source - 1000V

750A
M12 Threaded post for conductor up to 300mm²

Color*	Short Description	Part Number	
Brown – Phase L1	SPPC-PWL-PS-L1-BR-M12-T7	VS390100	Certified
Black – Phase L2	SPPC-PWL-PS-L2-BK-M12-T7	VS390101	Certified
Grey – Phase L3	SPPC-PWL-PS-L3-GY-M12-T7	VS390102	Certified
Blue – Neutral	SPPC-PWL-PS-N-BU-M12-T7	VS399000	Certified
Green – Earth	SPPC-PWL-PS-E-GN-M12-T7	VS399004	Certified

400A
M12 Threaded post for conductor up to 120mm²

Color*	Short Description	Part Number	
Brown – Phase L1	SPPC-PWL-PS-L1-BR-M12-T4	VS390065	Certified
Black – Phase L2	SPPC-PWL-PS-L2-BK-M12-T4	VS390132	Certified
Grey – Phase L3	SPPC-PWL-PS-L3-GY-M12-T4	VS390067	Certified
Blue – Neutral	SPPC-PWL-PS-N-BU-M12-T4	VS390063	Certified
Green – Earth	SPPC-PWL-PS-E-GN-M12-T4	VS390064	Certified

750A
Threaded Hole

Color*	Short Description	Part Number	
Brown – Phase L1	SPPC-PWL-PS-L1-BR-TH7	VS390290	Certified
Black – Phase L2	SPPC-PWL-PS-L2-BK-TH7	VS390291	Certified
Grey – Phase L3	SPPC-PWL-PS-L3-GY-TH7	VS390292	Certified
Blue – Neutral	SPPC-PWL-PS-N-BU-TH7	VS390293	Certified
Green – Earth	SPPC-PWL-PS-E-GN-TH7	VS390294	Certified

**European Harmonized Color Set, others colors set on request*

SPPC-PWL Connectors - Cable/Line drain - 1000V

400A
Screws terminal for conductor up to 120mm²**

Color*	Short Description	Part Number	
Brown – Phase L1	SPPC-PWL-LD-L1-BR-S-120-M	VS390091	c UL us Certified
Black – Phase L2	SPPC-PWL-LD-L2-BK-S-120-M	VS390092	c UL us Certified
Grey – Phase L3	SPPC-PWL-LD-L3-GY-S-120-M	VS390093	c UL us Certified
Blue – Neutral	SPPC-PWL-LD-N-BU-S-120-M	VS390090	c UL us Certified
Green – Earth	SPPC-PWL-LD-E-GN-S-120-M	VS390089	c UL us Certified

*** Sleeves included, for cable conductor size 35 mm² - 50 mm² - 70 mm² - 95 mm² - 120 mm²*

750A
Crimp contacts 300mm²

Color*	Short Description	Part Number	
Brown – Phase L1	SPPC-PWL-LD-L1-BR-C-300-OS	VS390275	Certified
Black – Phase L2	SPPC-PWL-LD-L2-BK-C-300-OS	VS390276	Certified
Grey – Phase L3	SPPC-PWL-LD-L3-GY-C-300-OS	VS390277	Certified
Blue – Neutral	SPPC-PWL-LD-N-BU-C-300-OS	VS390278	Certified
Green – Earth	SPPC-PWL-LD-E-GN-C-300-OS	VS390279	Certified

750A
Crimp contacts 240mm²

Color*	Short Description	Part Number	
Brown – Phase L1	SPPC-PWL-LD-L1-BR-C-240-OS	VS390105	Certified
Black – Phase L2	SPPC-PWL-LD-L2-BK-C-240-OS	VS390106	Certified
Grey – Phase L3	SPPC-PWL-LD-L3-GY-C-240-OS	VS390107	Certified
Blue – Neutral	SPPC-PWL-LD-N-BU-C-240-OS	VS390274	Certified
Green – Earth	SPPC-PWL-LD-E-GN-C-240-OS	VS390104	Certified

750A
Crimp contacts 185mm²

Color*	Short Description	Part Number	
Brown – Phase L1	SPPC-PWL-LD-L1-BR-C-185-OS	VS390126	Certified
Black – Phase L2	SPPC-PWL-LD-L2-BK-C-185-OS	VS390127	Certified
Grey – Phase L3	SPPC-PWL-LD-L3-GY-C-185-OS	VS390128	Certified
Blue – Neutral	SPPC-PWL-LD-N-BU-C-185-OS	VS390130	Certified
Green – Earth	SPPC-PWL-LD-E-GN-C-185-OS	VS390129	Certified

**European Harmonized Color Set, others colors set on request*

SPPC-PWL Connectors - Cable/Line source - 1000V

400A
Screws terminal for conductor up to 120mm²**

Color*	Short Description	Part Number	
Brown – Phase L1	SPPC-PWL-LS-L1-BR-S-120-M	VS390086	c UL us Certified
Black – Phase L2	SPPC-PWL-LS-L2-BK-S-120-M	VS390087	c UL us Certified
Grey – Phase L3	SPPC-PWL-LS-L3-GY-S-120-M	VS390088	c UL us Certified
Blue – Neutral	SPPC-PWL-LS-N-BU-S-120-M	VS390085	c UL us Certified
Green – Earth	SPPC-PWL-LS-E-GN-S-120-M	VS390084	c UL us Certified

*** Sleeves included, for cable conductor size 35 mm² - 50 mm² - 70 mm² - 95 mm² - 120 mm²*

750A
Crimp contacts 300mm²

Color*	Short Description	Part Number	
Brown – Phase L1	SPPC-PWL-LS-L1-BR-C-300-OS	VS390197	Certified
Black – Phase L2	SPPC-PWL-LS-L2-BK-C-300-OS	VS390198	Certified
Grey – Phase L3	SPPC-PWL-LS-L3-GY-C-300-OS	VS390199	Certified
Blue – Neutral	SPPC-PWL-LS-N-BU-C-300-OS	VS390300	Certified
Green – Earth	SPPC-PWL-LS-E-GN-C-300-OS	VS390196	Certified

750A
Crimp contacts 240mm²

Color*	Short Description	Part Number	
Brown – Phase L1	SPPC-PWL-LS-L1-BR-C-240-OS	VS390115	Certified
Black – Phase L2	SPPC-PWL-LS-L2-BK-C-240-OS	VS390116	Certified
Grey – Phase L3	SPPC-PWL-LS-L3-GY-C-240-OS	VS390117	Certified
Blue – Neutral	SPPC-PWL-LS-N-BU-C-240-OS	VS390118	Certified
Green – Earth	SPPC-PWL-LS-E-GN-C-240-OS	VS390114	Certified

750A
Crimp contacts 185mm²

Color*	Short Description	Part Number	
Brown – Phase L1	SPPC-PWL-LS-L1-BR-C-185-OS	VS390235	Certified
Black – Phase L2	SPPC-PWL-LS-L2-BK-C-185-OS	VS390154	Certified
Grey – Phase L3	SPPC-PWL-LS-L3-GY-C-185-OS	VS390155	Certified
Blue – Neutral	SPPC-PWL-LS-N-BU-C-185-OS	VS390225	Certified
Green – Earth	SPPC-PWL-LS-E-GN-C-185-OS	VS390226	Certified

**European Harmonized Color Set, others colors set on request*

SPPC-PWL Connectors - Panel Connectors - 1000V

Panel Source Connectors

Moulding for replacement, contacts and panel gasket to be order separately

Color*	Short Description	Part Number
Brown – Phase L1	SPPC-PWL-PS-ISOL-L1-BR	VS392101
Black – Phase L2	SPPC-PWL-PS-ISOL-L2-BK	VS392102
Grey – Phase L3	SPPC-PWL-PS-ISOL-L3-GY	VS392103
Blue – Neutral	SPPC-PWL-PS-ISOL-N-BU	VS392104
Green – Earth	SPPC-PWL-PS-ISOL-E-GN	VS392105

Type	Short Description	Part Number
Source - M12 Threaded post – 750A	SPPC-PWL-PS-CONT-M12-750A	VS392201
Source - M12 Threaded post – 400A	SPPC-PWL-PS-CONT-M12-400A	VS392203
Source – Threaded Hole – 750A	SPPC-PWL-PS-CONT-TH-750A	VS392205
Source - Threaded Hole – 400A	SPPC-PWL-PS-CONT-TH-400A	VS392207

Panel Drain Connectors

Moulding for replacement, contacts and panel gasket to be order separately

Color*	Short Description	Part Number
Brown – Phase L1	SPPC-PWL-PD-ISOL-L1-BR	VS392106
Black – Phase L2	SPPC-PWL-PD-ISOL-L2-BK	VS392107
Grey – Phase L3	SPPC-PWL-PD-ISOL-L3-GY	VS392108
Blue – Neutral	SPPC-PWL-PD-ISOL-N-BU	VS392109
Green – Earth	SPPC-PWL-PD-ISOL-E-GN	VS392110

Type	Short Description	Part Number
Drain - M12 Threaded post – 750A	SPPC-PWL-PD-CONT-M12-750A	VS392202
Drain - M12 Threaded post – 400A	SPPC-PWL-PD-CONT-M12-400A	VS392204
Drain - Threaded Hole – 750A	SPPC-PWL-PD-CONT-TH-750A	VS392206
Drain - Threaded Hole – 400A	SPPC-PWL-PD-CONT-TH-400A	VS392208

**European Harmonized Color Set, others colors set on request*

SPPC-PWL Connectors - Cable/Line Connectors - 1000V

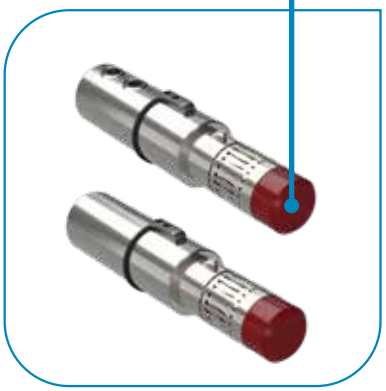

Cable/Line Source Connectors

Moulding for replacement, contacts and cable gland to be order separately

Color*	Short Description	Part Number
Brown – Phase L1	SPPC-PWL-LS-ISOL-L1-BR	VS392111
Black – Phase L2	SPPC-PWL-LS-ISOL-L2-BK	VS392112
Grey – Phase L3	SPPC-PWL-LS-ISOL-L3-GY	VS392113
Blue – Neutral	SPPC-PWL-LS-ISOL-N-BU	VS392114
Green – Earth	SPPC-PWL-LS-ISOL-E-GN	VS392115

Type	Short Description	Part Number
Source – Screw up to 35mm2-120mm²**– 400A	SPPC-PWL-LS-CONT-S-400A	VS392209
Source – Crimp contacts 185 mm² – 750A	SPPC-PWL-LS-CONT-CRIMP.185-750A	VS392211
Source – Crimp contacts 240 mm² – 750A	SPPC-PWL-LS-CONT-CRIMP.240-750A	VS392213
Source – Crimp contacts 300 mm² – 750A	SPPC-PWL-LS-CONT-CRIMP.300-750A	VS392215

Cable/Line Drain Connectors

Moulding for replacement, contacts and cable gland to be order separately

Color*	Short Description	Part Number
Brown – Phase L1	SPPC-PWL-LD-ISOL-L1-BR	VS392116
Black – Phase L2	SPPC-PWL-LD-ISOL-L2-BK	VS392117
Grey – Phase L3	SPPC-PWL-LD-ISOL-L3-GY	VS392118
Blue – Neutral	SPPC-PWL-LD-ISOL-N-BU	VS392119
Green – Earth	SPPC-PWL-LD-ISOL-E-GN	VS392120

Type	Short Description	Part Number
Drain – Screw up to 35mm2-120mm²**– 400A	SPPC-PWL-LD-CONT-S-400A	VS392210
Drain – Crimp contacts 185 mm² – 750A	SPPC-PWL-LD-CONT-CRIMP.185-750A	VS392212
Drain – Crimp contacts 240 mm² – 750A	SPPC-PWL-LD-CONT-CRIMP.240-750A	VS392214
Drain – Crimp contacts 300 mm² – 750A	SPPC-PWL-LD-CONT-CRIMP.300-750A	VS392216

European Harmonized Color Set, others colors set on request

SPPC-PWL Connectors - Cable/Line drain - 1000V - 500A**

BIMETALLIC CONNECTORS FOR ALUMINIUM CABLES

For crimping tool and crimping die, please consult our commercial office.

Crimp contacts 300mm², cable external diameter 33mm – 37mm

Color*	Short Description	Part Number
Brown – Phase L1	SPPC-PWL-LD-L1-BR-C-300-OS-M50-BM	VS390432
Black – Phase L2	SPPC-PWL-LD-L2-BK-C-300-OS-M50-BM	VS390433
Grey – Phase L3	SPPC-PWL-LD-L3-GY-C-300-OS-M50-BM	VS390434
Blue – Neutral	SPPC-PWL-LD-N-BU-C-300-OS-M50-BM	VS390431
Green – Earth	SPPC-PWL-LD-E-GN-C-300-OS-M50-BM	VS390430

Crimp contacts 240mm², cable external diameter 33mm – 37mm**

*** on request version OS-BM with cable external diameter 22mm – 32mm*

Color*	Short Description	Part Number
Brown – Phase L1	SPPC-PWL-LD-L1-BR-C-240-OS-M50-BM	VS390422
Black – Phase L2	SPPC-PWL-LD-L2-BK-C-240-OS-M50-BM	VS390423
Grey – Phase L3	SPPC-PWL-LD-L3-GY-C-240-OS-M50-BM	VS390424
Blue – Neutral	SPPC-PWL-LD-N-BU-C-240-OS-M50-BM	VS390421
Green – Earth	SPPC-PWL-LD-E-GN-C-240-OS-M50-BM	VS390420

Crimp contacts 185mm², cable external diameter 22mm – 32mm

Color*	Short Description	Part Number
Brown – Phase L1	SPPC-PWL-LD-L1-BR-C-185-OS-BM	VS390402
Black – Phase L2	SPPC-PWL-LD-L2-BK-C-185-OS-BM	VS390403
Grey – Phase L3	SPPC-PWL-LD-L3-GY-C-185-OS-BM	VS390404
Blue – Neutral	SPPC-PWL-LD-N-BU-C-185-OS-BM	VS390401
Green – Earth	SPPC-PWL-LD-E-GN-C-185-OS -BM	VS390400

*** Permissible cable rating (A) to be checked with the specific cable characteristic*

**European Harmonized Color Set, others colors set on request*

SPPC-PWL Connectors - Cable/Line source - 1000V - 500A**

BIMETALLIC CONNECTORS FOR ALUMINIUM CABLES

For crimping tool and crimping die, please consult our commercial office.

Crimp contacts 300mm², cable external diameter 33mm – 37mm

Color*	Short Description	Part Number
Brown – Phase L1	SPPC-PWL-LS-L1-BR-C-300-OS-M50-BM	VS390437
Black – Phase L2	SPPC-PWL-LS-L2-BK-C-300-OS-M50-BM	VS390438
Grey – Phase L3	SPPC-PWL-LS-L3-GY-C-300-OS-M50-BM	VS390439
Blue – Neutral	SPPC-PWL-LS-N-BU-C-300-OS-M50-BM	VS390436
Green – Earth	SPPC-PWL-LS-E-GN-C-300-OS-M50-BM	VS390435

Crimp contacts 240mm², cable external diameter 33mm – 37mm**

*** on request version OS-BM with cable external diameter 22mm – 32mm*

Color*	Short Description	Part Number
Brown – Phase L1	SPPC-PWL-LS-L1-BR-C-240-OS-M50-BM	VS390427
Black – Phase L2	SPPC-PWL-LS-L2-BK-C-240-OS-M50-BM	VS390428
Grey – Phase L3	SPPC-PWL-LS-L3-GY-C-240-OS-M50-BM	VS390429
Blue – Neutral	SPPC-PWL-LS-N-BU-C-240-OS-M50-BM	VS390426
Green – Earth	SPPC-PWL-LS-E-GN-C-240-OS-M50-BM	VS390425

Crimp contacts 185mm², cable external diameter 22mm – 32mm

Color*	Short Description	Part Number
Brown – Phase L1	SPPC-PWL-LS-L1-BR-C-185-OS-BM	VS390407
Black – Phase L2	SPPC-PWL-LS-L2-BK-C-185-OS-BM	VS390408
Grey – Phase L3	SPPC-PWL-LS-L3-GY-C-185-OS-BM	VS390409
Blue – Neutral	SPPC-PWL-LS-N-BU-C-185-OS-BM	VS390406
Green – Earth	SPPC-PWL-LS-E-GN-C-185-OS-BM	VS390405

*** Permissible cable rating (A) to be checked with the specific cable characteristic*

**European Harmonized Color Set, others colors set on request*

SPPC-PWL Connectors - Cable/Line - 1000V - 400/500A**

BIMETALLIC CONNECTORS FOR ALUMINIUM CABLES

For crimping tool and crimping die, please consult our commercial office.

Cable/Line Drain

Crimp contacts 120mm², cable external diameter 19mm – 28mm - 400A

Color*	Short Description	Part Number
Brown – Phase L1	SPPC-PWL-LD-L1-BR-C-120-M-BM	VS390456
Black – Phase L2	SPPC-PWL-LD-L2-BK-C-120-M-BM	VS390457
Grey – Phase L3	SPPC-PWL-LD-L3-GY-C-120-M-BM	VS390458
Blue – Neutral	SPPC-PWL-LD-N-BU-C-120-M-BM	VS390459
Green – Earth	SPPC-PWL-LD-E-GN-C-120-M -BM	on request

Cable/Line Drain

Crimp contacts 150mm², cable external diameter 19mm – 28mm - 500A

Color*	Short Description	Part Number
Brown – Phase L1	SPPC-PWL-LD-L1-BR-C-150-M-BM	VS390448
Black – Phase L2	SPPC-PWL-LD-L2-BK-C-150-M-BM	VS390449
Grey – Phase L3	SPPC-PWL-LD-L3-GY-C-150-M-BM	VS390450
Blue – Neutral	SPPC-PWL-LD-N-BU-C-150-M-BM	VS390451
Green – Earth	SPPC-PWL-LD-E-GN-C-150-M -BM	on request

Cable/Line Source

Crimp contacts 120mm², cable external diameter 19mm – 28mm - 400A

Color*	Short Description	Part Number
Brown – Phase L1	SPPC-PWL-LS-L1-BR-C-120-M-BM	VS390452
Black – Phase L2	SPPC-PWL-LS-L2-BK-C-120-M-BM	VS390453
Grey – Phase L3	SPPC-PWL-LS-L3-GY-C-120-M-BM	VS390454
Blue – Neutral	SPPC-PWL-LS-N-BU-C-120-M-BM	VS390455
Green – Earth	SPPC-PWL-LS-E-GN-C-120-M-BM	on request

Cable/Line Source

Crimp contacts 150mm², cable external diameter 19mm – 28mm - 500A

Color*	Short Description	Part Number
Brown – Phase L1	SPPC-PWL-LS-L1-BR-C-150-M-BM	VS390444
Black – Phase L2	SPPC-PWL-LS-L2-BK-C-150-M-BM	VS390445
Grey – Phase L3	SPPC-PWL-LS-L3-GY-C-150-M-BM	VS390446
Blue – Neutral	SPPC-PWL-LS-N-BU-C-150-M-BM	VS390447
Green – Earth	SPPC-PWL-LS-E-GN-C-150-M-BM	on request

*** Permissible cable rating (A) to be checked with the specific cable characteristic*

**European Harmonized Color Set, others colors set on request*

SPPC-PWL Connectors - Cable/Line - 1000V - 750A

CONNECTORS FOR LUG

Lug Palm Width 30mm max, Bolt Hole 10mm

Cable/Line Drain

Contacts for Lug, cable external diameter 22mm – 32mm

Color*	Short Description	Part Number
Brown – Phase L1	SPPC-PWL-LD-L1-BR-L-OS	on request
Black – Phase L2	SPPC-PWL-LD-L2-BK-L-OS	on request
Grey – Phase L3	SPPC-PWL-LD-L3-GY-L-OS	on request
Blue – Neutral	SPPC-PWL-LD-N-BU-L-OS	on request
Green – Earth	SPPC-PWL-LD-E-GN-L-OS	on request

Cable/Line Source

Contacts for Lug, cable external diameter 22mm – 32mm

Color*	Short Description	Part Number
Brown – Phase L1	SPPC-PWL-LS-L1-BR-L-OS	on request
Black – Phase L2	SPPC-PWL-LS-L2-BK-L-OS	on request
Grey – Phase L3	SPPC-PWL-LS-L3-GY-L-OS	on request
Blue – Neutral	SPPC-PWL-LS-N-BU-L-OS	on request
Green – Earth	SPPC-PWL-LS-E-GN-L-OS	on request

**European Harmonized Color Set, others colors set on request*

SPPC-PWL Connectors - Crimping Tool

Installation Instructions:

- Select proper contacts for the copper wire size used.
- Strip the cable insulation as indicated in the table
- Insert conductor into the barrel.
- Select the proper die as indicated in the table.
- It is recommended to apply multiple crimp compressions in accordance with the above table to obtain optimum mechanical and electrical performance.

The correct sequence of compressions is shown in Fig.2.

Use the following tool:
- Hand operated crimp tool: HT131-C
- Cordless Hydraulic Crimp Tool: B131-C

Due to the numerous cable types available, it is recommended to contact our Customer Service to confirm cable & crimp suitability.

Cable Size	**Up to**	**185mm²**	**240mm²**	**300mm²**	**150 ÷ 185mm²**	**240mm²**	**240 ÷ 300mm²**
	120mm²	**low stranded wire**			**fine stranded wire**		
Insulation Strip (dim L)	33mm	40mm	40mm	40mm	40mm	40mm	40mm
Recommended Number of Crimps	N/A (set screw)	1/2	3	3	1/2	3	3
Hand Operated Crimp Tool	N/A	HT120 HT131-C	HT120 HT131-C	HT120 HT131-C	HT120 HT131-C	HT120 HT131-C	HT120 HT131-C
Crimp Die Set	N/A	ME37-C (1) ME48-C (2)	ME60-C	ME60-C	ME37-C (1) ME48-C (2)	ME60-C	ME60-C
Contact Removal Tool	VS390038	VS390039	VS390039	VS390039	VS390039	VS390039	VS390039

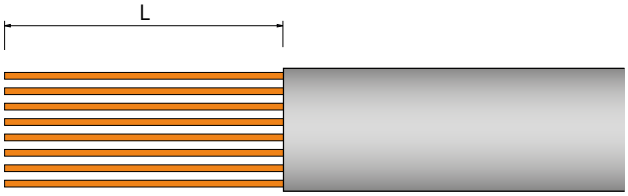

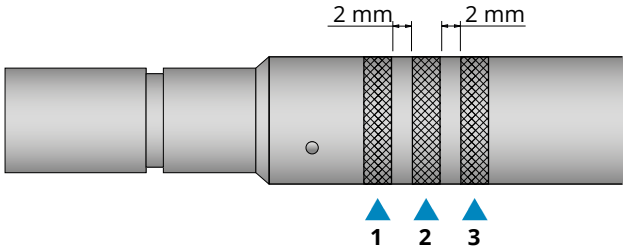

Fig.2

Bimetallic contacts for aluminium cable

Cable Size	**70mm²**	**120mm²**	**150mm²**	**185mm²**	**240mm²**	**300mm²**
	fine stranded wire					
Hand Operated Crimp Tool	***	HT120 HT131-C	HT120 HT131-C	HT120 HT131-C	ECW-H3D*	ECW-H3D*
Crimp Die Set	***	ME48-C	ME48-C	ME60-C	MK32-3D	MK32-3D
Contact Removal Tool	VS390039	VS390039	VS390039	VS390039	VS390460	VS390460
Recommended Number of crimp	2	2	2	2	3	3
Anti-oxidant compound**	VS390461	VS390461	VS390461	VS390461	VS390461	VS390461

* *For the its operation it is necessary to combine it to a hydraulic pump*
** *It is recommended to cover the internal walls of the contact hole (suitable for receiving the cable conductor) with the antioxidant compound*
*** *Consult our sales office*

Hydraulic pump ECW-H3D

Hand Operated Crimp Tool HT131-C

SPPC-PWL Connectors - Removal Tool

Type	Short Description	Part Number
Screw set termination	SPPC-PWL-RT-25-120	VS390038
Crimp contacts	SPPC-PWL-RT-185-300	VS390039

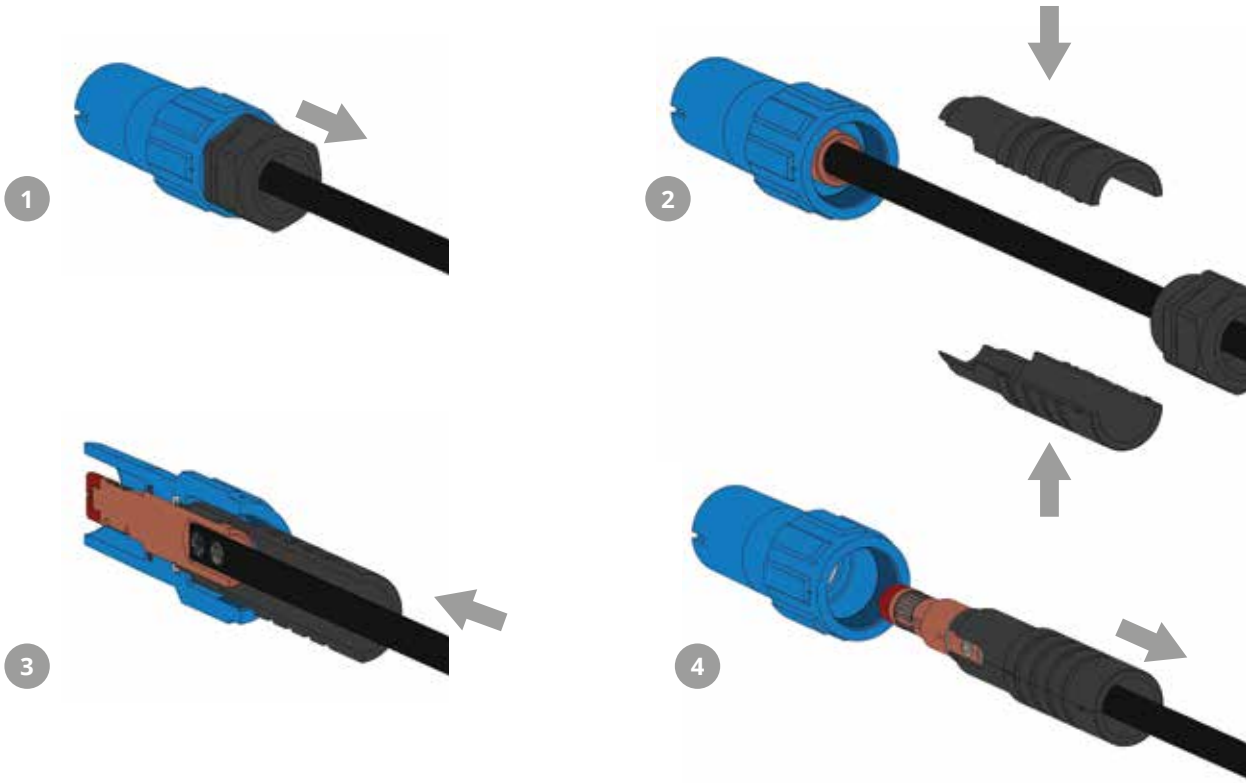

Type	Short Description	Part Number
Release Key	SPPC-PWL-KEY	VS392309

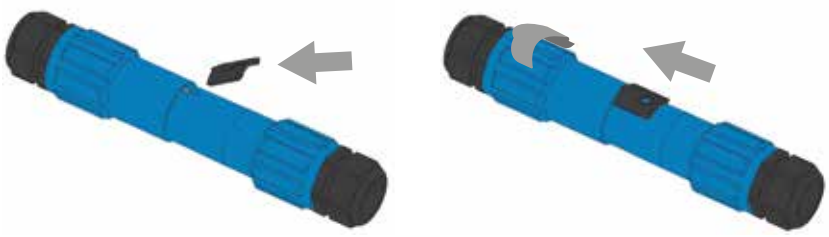

SPPC-PWL/SPPC-PWL-2.0 Connectors - Accessories

Cable Gland - for Cable/Line Connectors

Type	Short Description	Part Number
M40 threaded (19mm-28mm)	SPPC-PWL-M40	VS392301
M40 threaded (22mm-32mm)	SPPC-PWL-M40-A	VS392302
M50 threaded* (33mm-37mm)	SPPC-PWL-OS-M50	-

** To be ordered with cable/line connectors only*

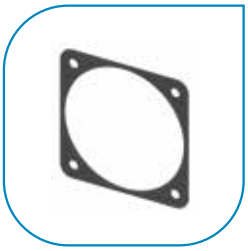

Panel Gasket

Type	Short Description	Part Number
Neoprene Gaskets	SPPC-PWL-PG	VS392308

Sleeve For Screw Contacts

Type	Short Description	Part Number
Sleeve**	SPPC-PWL-SLEEVE	VS392312

*** Sleeves for cable conductor size 35 mm² - 50 mm² - 70 mm² - 95 mm² - 120 mm²*

Enviromental Locking Caps

Type	Short Description	Part Number
Panel SOURCE	SPPC-PWL-PS-CAP	VS392304
Panel DRAIN	SPPC-PWL-PD-CAP	VS392305
Inline SOURCE	SPPC-PWL-LS-CAP	VS392306
Inline DRAIN	SPPC-PWL-LD-CAP	VS392307

Dust Caps

(on request)

Type	Short Description	Part Number
Source	SPPC-PWL-PS-LS DUST CAP	VS392313
Drain	SPPC-PWL-PD-LD DUST CAP	VS392314

SPPC-PWL Cable - Bimetallic Connectors

HOFR - N - Aluminium Cable Specifications

Cable Standards
BS 638 / Part 4

The electrical and dimensional properties of this product are measured by the Technical and Quality Assurance department. Cable performance in respect of conductor resistance, construction quality (workmanship), dimensional consistency, and other parameters are verified to published standards and approved product drawings. Conformance to RoHS (Restriction of the use of Hazardous Substances) is determined and confirmed.

Construction

Conductor	Aluminium Flexible Rope
Seperator	Polyester Foil
Insulation	EPDM (Ethylene Propylene Diene Monomer)
Outer Sheath	PCP (Polychloroprene)

Characteristics

Operating Voltage	450V / 750V
Test Voltage	3kV
Temperature Range	-20°c to +85°c
Minimum Bending Radius	10 x overall diameter
Outer Sheath Colour	Black

Dimensions

Nominial Cross Sectional Area mm²	Nominial Diameter Of Conductor mm	Nominial Thickness of Insulation mm	Nominial Outer Diameter mm	Nominial Weight kg/km
35	7.0	0.9	14.0	190
50	8.3	0.9	16.0	320
70	10.9	0.9	17.5	400
95	12.3	1.0	20.0	520
120	14.2	1.0	23.5	560
150	16.2	1.1	24.5	690
185	17.5	1.2	27.0	880
240	22.7	1.3	32.0	1110

Electrical Characteristics

Nominial Cross Sectional Area mm²	Electrical Resistance at 20°C mm	Permanent Current A	Voltage Drop at 85° V/A/10m
35	0.886	175	1.120
50	0.616	225	0.778
70	0.440	275	0.55
95	0.326	335	0.411
120	0.254	390	0.321
150	0.208	455	0.263
185	0.167	510	0.210
240	0.126	600	0.159

De-rating Factors

Ambient Temperature	30°C	35°C	40°C	45°C	50°C	55°C
Reduction Factor	0.96	0.91	0.87	0.82	0.76	0.71

SPPC-PWL Cable - Bimetallic Connectors

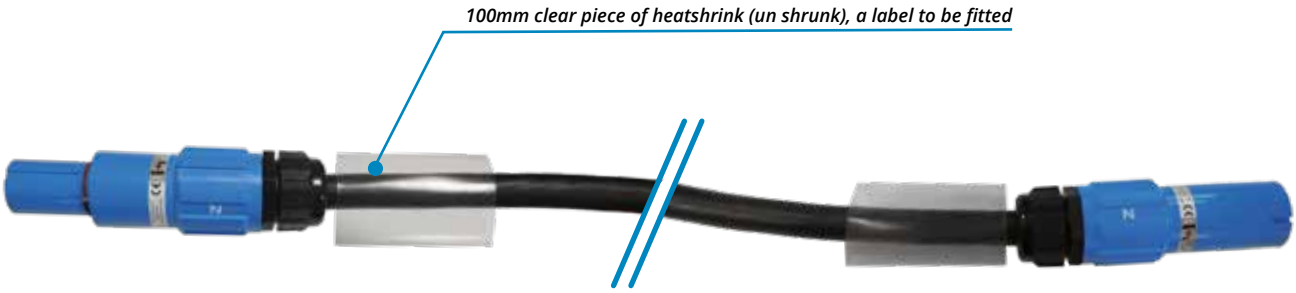

Drain-Source 16 mt

Color*		Short Description	Part Number
	Brown – Phase L1	SPPC-CA-PWL-LD-LS-L1-BR-C120-BM-16MT	VS393101
	Black – Phase L2	SPPC-CA-PWL-LD-LS-L2-BK-C120-BM-16MT	VS393105
	Grey – Phase L3	SPPC-CA-PWL-LD-LS-L3-GY-C120-BM-16MT	VS393109
	Blue – Neutral	SPPC-CA-PWL-LD-LS-N-BU-C120-BM-16MT	VS393113
	Green – Earth	SPPC-CA-PWL-LD-LS-E-GN-C120-BM-16MT	on request

Drain-Source 11 mt

Color*		Short Description	Part Number
	Brown – Phase L1	SPPC-CA-PWL-LD-LS-L1-BR-C120-BM-11MT	VS393102
	Black – Phase L2	SPPC-CA-PWL-LD-LS-L2-BK-C120-BM-11MT	VS393106
	Grey – Phase L3	SPPC-CA-PWL-LD-LS-L3-GY-C120-BM-11MT	VS393110
	Blue – Neutral	SPPC-CA-PWL-LD-LS-N-BU-C120-BM-11MT	VS393114
	Green – Earth	SPPC-CA-PWL-LD-LS-E-GN-C120-BM-11MT	on request

**European Harmonized Color Set, others colors set on request*

SPPC-PWL Cable - Bimetallic Connectors

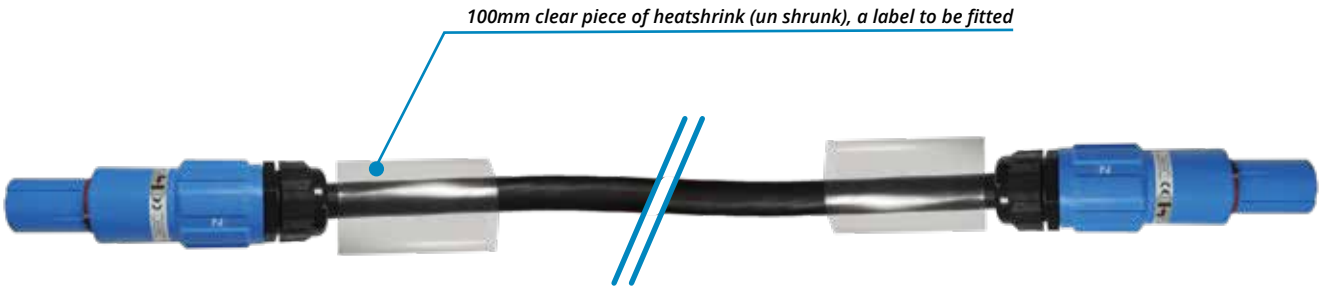

Drain-Drain 11 mt

Color*		Short Description	Part Number
	Brown – Phase L1	SPPC-CA-PWL-LD-LD-L1-BR-C120-BM-11MT	VS393103
	Black – Phase L2	SPPC-CA-PWL-LD-LD-L2-BK-C120-BM-11MT	VS393107
	Grey – Phase L3	SPPC-CA-PWL-LD-LD-L3-GY-C120-BM-11MT	VS393111
	Blue – Neutral	SPPC-CA-PWL-LD-LD-N-BU-C120-BM-11MT	VS393115
	Green – Earth	SPPC-CA-PWL-LD-LD-E-GN-C120-BM-11MT	on request

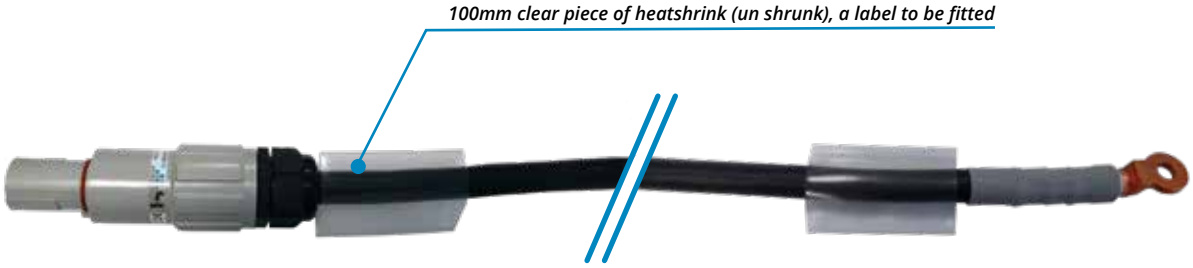

Drain-Lug 11 mt

Color*		Short Description	Part Number
	Brown – Phase L1	SPPC-CA-PWL-LD-CL-L1-BR-C120-BM-11MT	VS393104
	Black – Phase L2	SPPC-CA-PWL-LD-CL-L2-BK-C120-BM-11MT	VS393108
	Grey – Phase L3	SPPC-CA-PWL-LD-CL-L3-GY-C120-BM-11MT	VS393112
	Blue – Neutral	SPPC-CA-PWL-LD-CL-N-BU-C120-BM-11MT	VS393116
	Green – Earth	SPPC-CA-PWL-LD-CL-E-GN-C120-BM-11MT	on request

**European Harmonized Color Set, others colors set on request*

SPPC-PWL Connectors - Accessories

Narrow Insulated Clamp - Short Arm

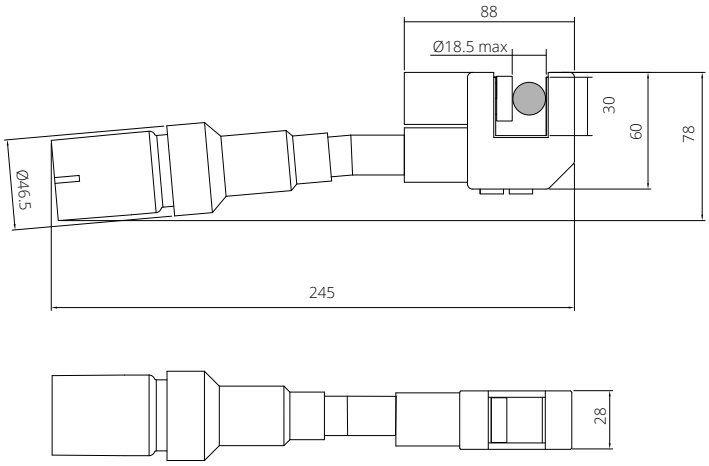

Narrow Insulated Clamp - Line Source

Color*	Short Description	Part Number
Brown – Phase L1	SPPC-CL-PWL-LS-L1-BR	VS393117
Black – Phase L2	SPPC-CL-PWL-LS-L2-BK	VS393118
Grey – Phase L3	SPPC-CL-PWL-LS-L3-GY	VS393119
Blue – Neutral	SPPC-CL-PWL-LS-N-BU	VS393120
Green – Earth	SPPC-CL-PWL-LS-E-GN	on request

Narrow Insulated Clamp - Line Drain

Color*	Short Description	Part Number
Brown – Phase L1	SPPC-CL-PWL-LD-L1-BR	on request
Black – Phase L2	SPPC-CL-PWL-LD-L2-BK	on request
Grey – Phase L3	SPPC-CL-PWL-LD-L3-GY	on request
Blue – Neutral	SPPC-CL-PWL-LD-N-BU	on request
Green – Earth	SPPC-CL-PWL-LD-E-GN	on request

**European Harmonized Color Set, others colors set on request*

Tightening Tool

Short Description	Part Number
SPPC-GC-PWL-TOOL	VS393121

SPPC-PWL/SPPC-PWL-2.0 Connectors

Derating data for 85°C rubber insulated cables

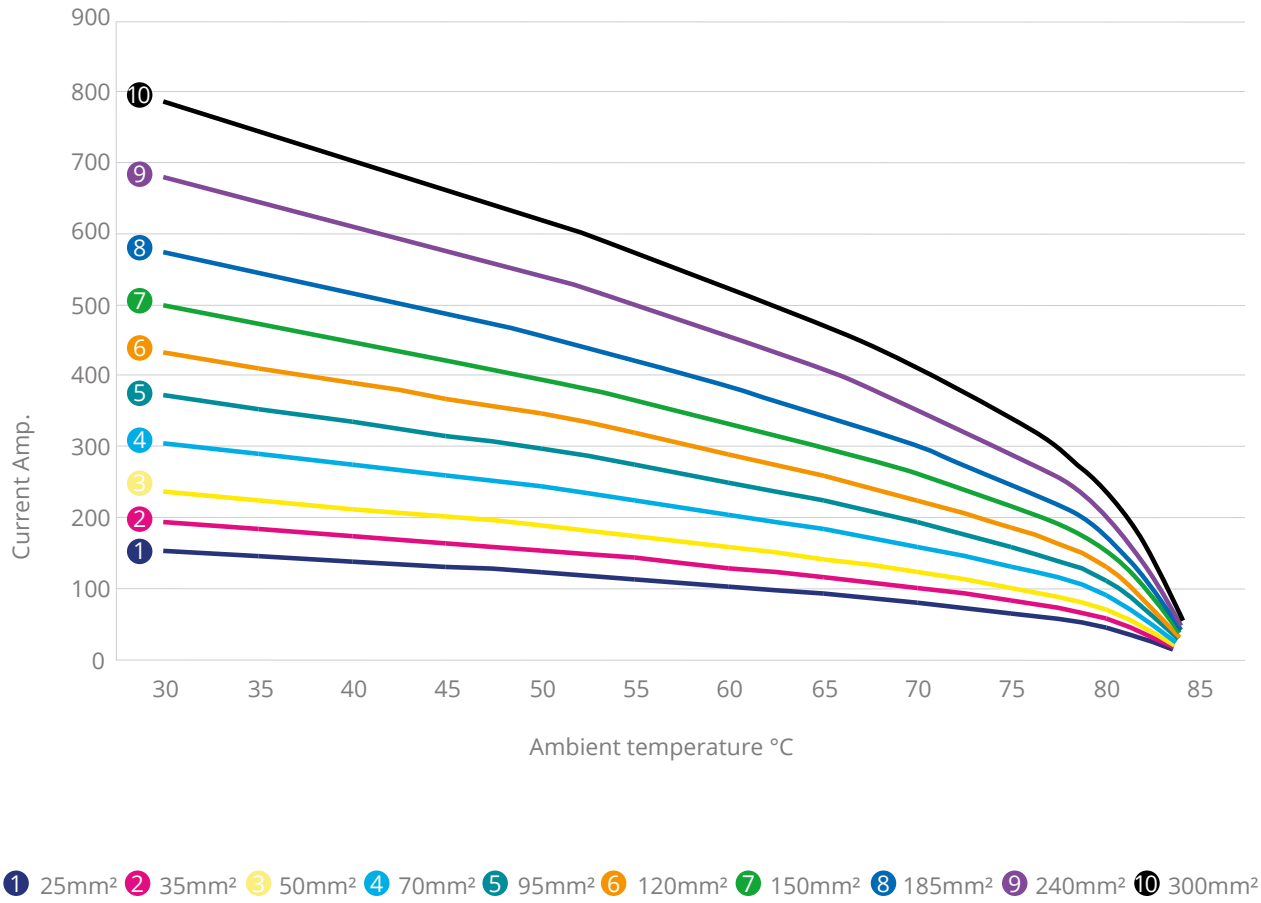

Characteristics

Screws Tightening Torque (in-line connectors)	12Nm
Panel Contact Tightening Torque	30Nm max
Cable Gland Tightening Torque	13Nm
Minimum Mating Cycles	500
Contact Retention in Insulator	2.5kN Axial Load
Flammability	UL94 V0
Environmental Sealing (when mated)	IP67
Rated Voltage to Earth	2000Vac
Minimum Flashover (EN60309–1)	6.8kV AC – 1 minute
Minimum Insulation Resistance	5GΩ @ 500V
Operating Voltage	1000V AC or DC
Test Voltage (Mated Condition)	5 kV– 1 minute @ 50Hz
Contact Resistance	<0.1mΩ
Short Circuit Current – 1 second	16kA
Short Circuit Current – 3 seconds	12kA
Surge Current (DIN VDE 0102/1.90)	62kA – 10mseconds
Creepage Distance	>25mm
Clearance Distance	>25mm
Temperature Range	-30°C / +125°C

SPPC-HK Connectors - Introduction

Single Pole Power Connector up to 400A

HOOK series offers new opportunities of using the electrical connection even in applications where in the past this was not possible due to low cost requirements and without renouncing to a complete range of features concerning robustness, reliability and safety.

APPLICATIONS:

- Power distribution
- Utilities
- Electric Vehicles
- Railway Equipment
- Military Field Power
- Mobile Generators
- Loadbanks
- Back-up Power Systems

KEY CHARACTERISTICS

- brass contacts for current up to 250A and cable section from 16 to 70 mm² or from 4 to 2/0AWG
- copper contacts for current up to 400A and cable section from 95 to 120 mm² or for 4/0AWG
- 500 mating cycles minimum
- IP67 sealed when mated
- EN/ESI compliant creepage and clearance distances
- UL 94V0 flame retardant insulating material
- EN/CE compliant metric cable glands
- Cable sizes from 16 to 120 mm² or from 4 to 4/0 AWG
- Set screw and crimp contact versions
- Multi-louver contact version
- CE compliant

Drain cable connectors are typically used as the live or supply side of the circuit. They are finger protected in the un-mated condition to meet the requirements IP2X. They protect the user form accidental contact with any live elements.

Source cable connectors are typically used as the load side of the circuit.

The cable connectors are either available:
• With set screw terminal (with or with/out crimping sleeves) for cable section from 16 to 70 mm² or from 4 to 2/0AWG
• With crimp termination for cable sections up to 120 mm² or for 4/0AWG
A plastic water tight strain relief is supplied to provide IP67 sealing.

Drain panel connector are typically used as the live or supply side of the circuit. They are finger protected in the un-mated condition to meet the requirements IP2X.

Source panel connectors are typically used as the load side of the circuit.

Panel connectors can be either front or rear mounted on equipment while maintaining EN/ESI creepage and clearance distances, and are supplied in brass material (up to 250A) or in copper material (up to 400A) versions.
These connectors have M12 threaded post termination and are supplied with pre-installed contacts.

SPPC-HK Connectors - Introduction

Single Pole Power Connector up to 400A

POWER CONNECTORS TYPES:

- **Source: Socket** connector is the source of the power, it receives and holds the Pin connector.
- **Drain: Pin** connectors receives and holds the Socket connector.

- **Cable/line: source (1) or drain (2)** is a moveable connectors fitted to a cable. The contacts are available in crimp or screw terminal.
- **Panel: source (3) or drain (4)** receptacle connectors to be fixed to a panel.

Power connectors cannot be mated/unmated under voltage or underloaded.

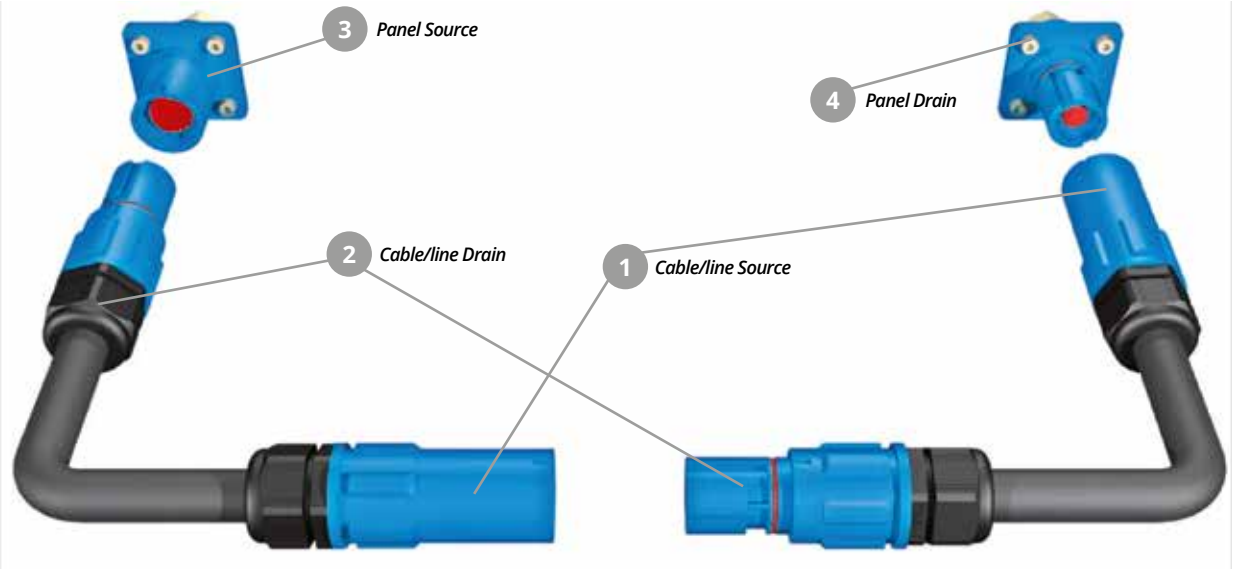

MECHANICALLY KEYED TO PREVENT CONNECTION ERRORS

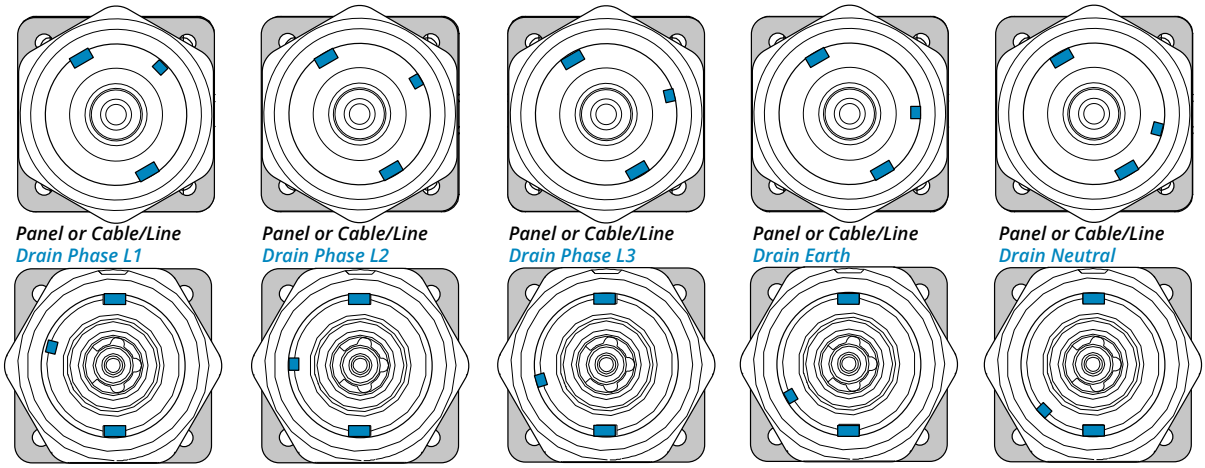

COLOUR CODING.

Standard	Phase L1	Phase L2	Phase L3	Earth	Neutral
Europe	Brown (BR)	Black (BK)	Grey (GY)	Green (GN)	Blue (BU)

SPPC-HK Connectors - Part number explanation

SPPC-HK	LS	L1	BR	C-120	M	

P/N Sample: SPPC-HK-LS-L1-BR-C-120-M

SPPC-HK	**Series Code**	**SPPC-HK**		Single Pole Power Connectors
LS	**Connector Type**	**LS**		Cable/Line Source
		LD		Cable/Line Drain
		PS		Panel Source
		PD		Panel Drain
L1	**Key Position**	**E**		Earth
		N		Neutral
		L1		Phase 1
		L2		Phase 2
		L3		Phase 3
BR	**Insulator Color**	**BR**	●	Brown
		BK	●	Black
		GY	●	Grey
		BU	●	Blue
		GN	●	Green
C-240	**Contact Termination**	**M12-T2**		M12 Threaded post – 250A
		M12-T4		M12 Threaded post – 400A
		S-70		Screw terminal – 250A up to 70mm²
		C-70		Crimp contacts – 250A 70mm²
		C-120		Crimp contacts – 400A 95mm² - 120mm²
M	**Cable External diameter**	**S**		7mm – 15mm
		M		11mm – 21mm
		OS		18mm – 25mm
	Microswitch	**-**		without microswitch
		SW		with normally open microswitch
		SWC		with normally closed microswitch
	Customization			

SPPC-HK Connectors - Introduction

Hook Mating System: a faster and more reliable connection

- Position major key alignment arrows
- Firmly push the Pin and Socket connectors together
- Rotate the Pin and Socket connectors in opposite direction until the padlock symbol is in alignment with the arrow symbol
- Release the connectors and they spring into the locked position.
- To unlock, push the connectors firmly together, rotate in opposite directions and pull apart

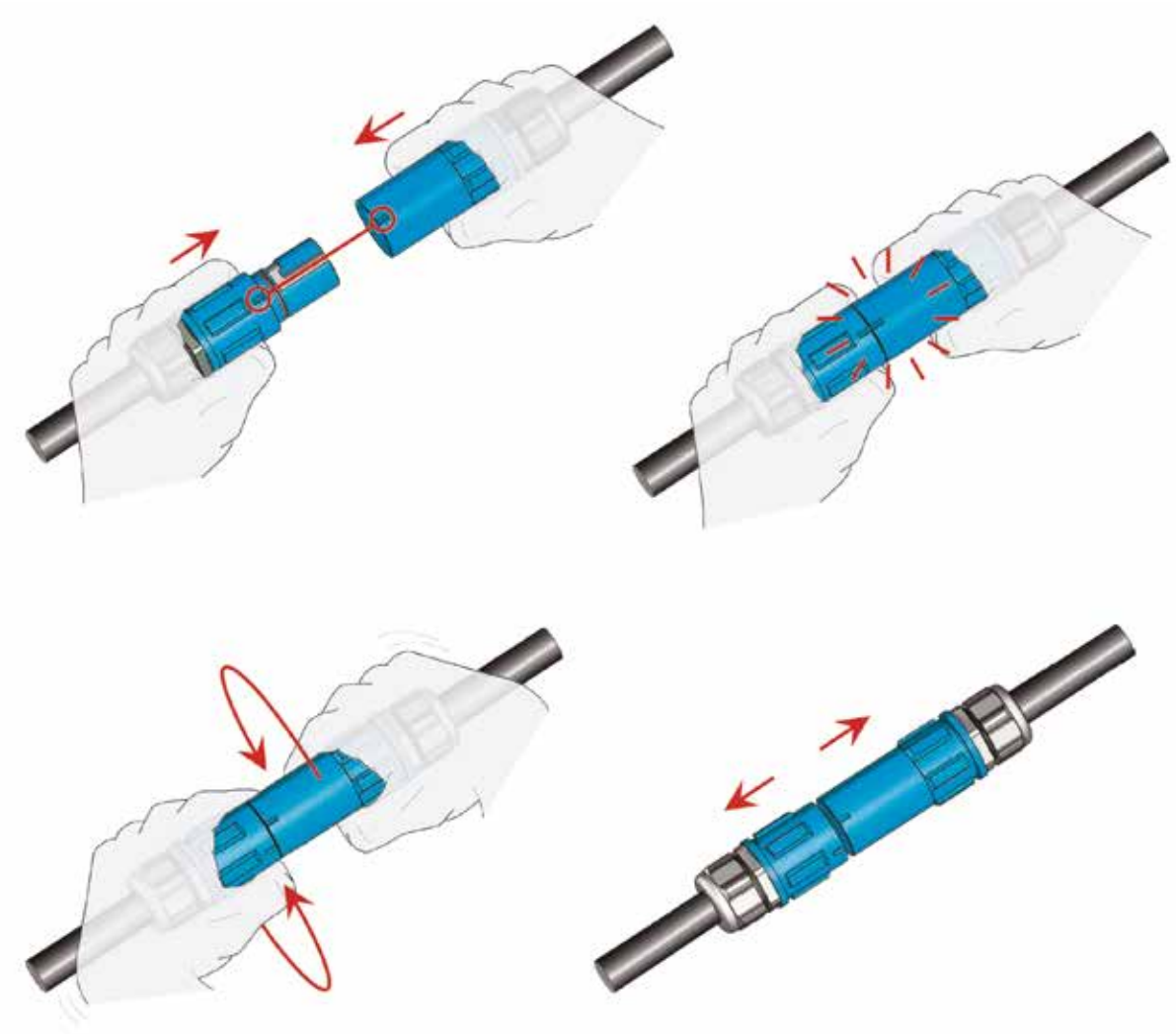

Unwanted uncoupling prevention: a simple cable tie makes the system safer.

The connectors can only be separated by removing it with a suitable tool.

SPPC-HK Connectors - Dimensions

Panel Source Connectors

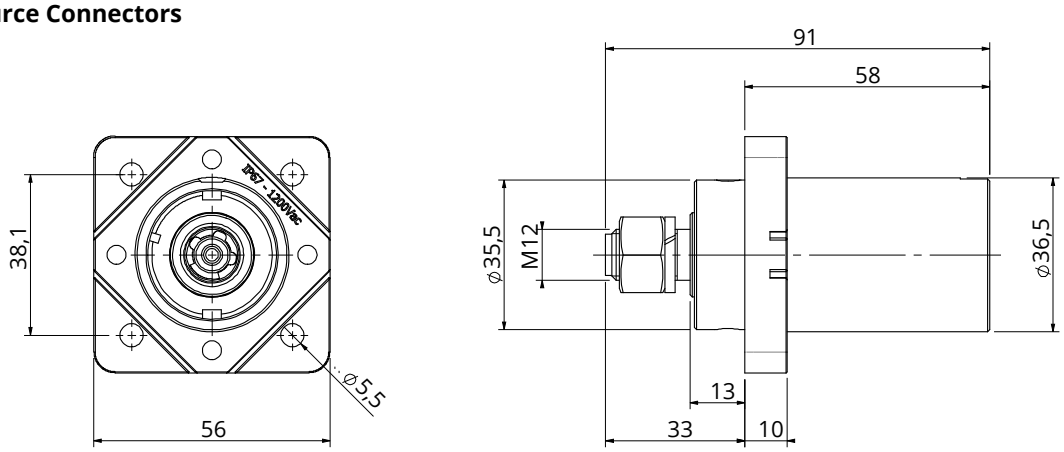

Panel Drain Connectors

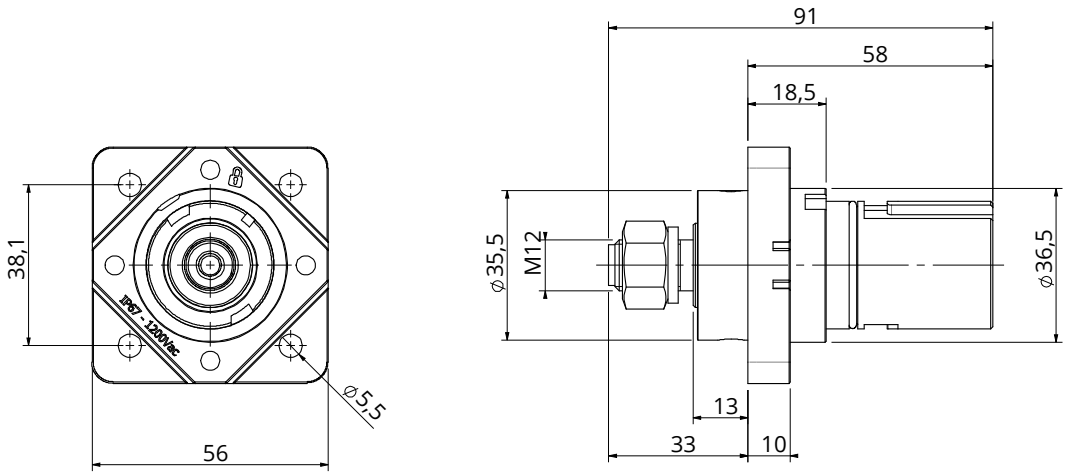

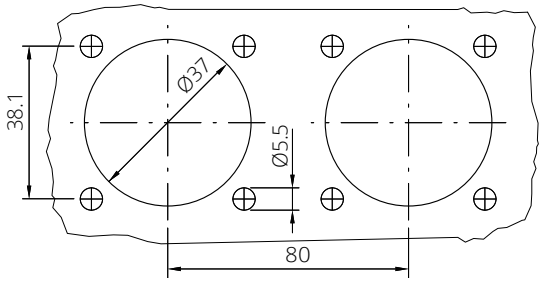

Panel cut out Source / Drain connectors

Panel Drain Connectors with Normally Open Microswitch

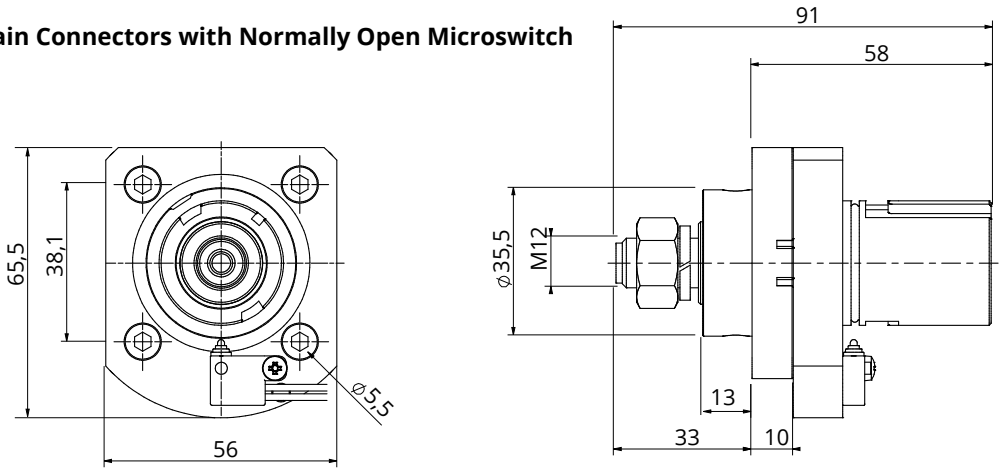

SPPC-HK Connectors - Dimensions

Cable/Line Source Connectors S/M (SPPC-HK-LS-xx-xx-x-xx-S / SPPC-HK-LS-xx-xx-x-xx-M)

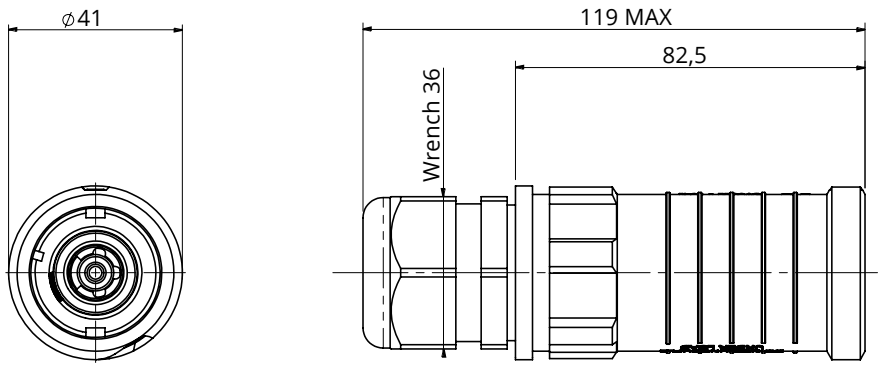

Cable/Line Source Connectors OS (SPPC-HK-LS-xx-xx-x-xx-OS)

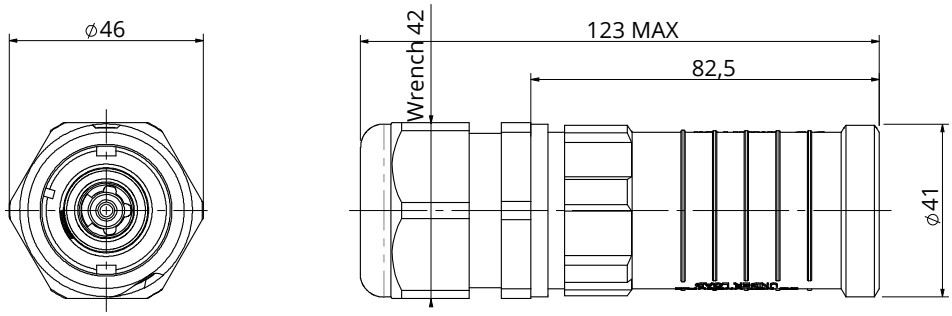

Cable/Line Drain Connectors S/M (SPPC-HK-LD-xx-xx-x-xx-S / SPPC-HK-LD-xx-xx-x-xx-M)

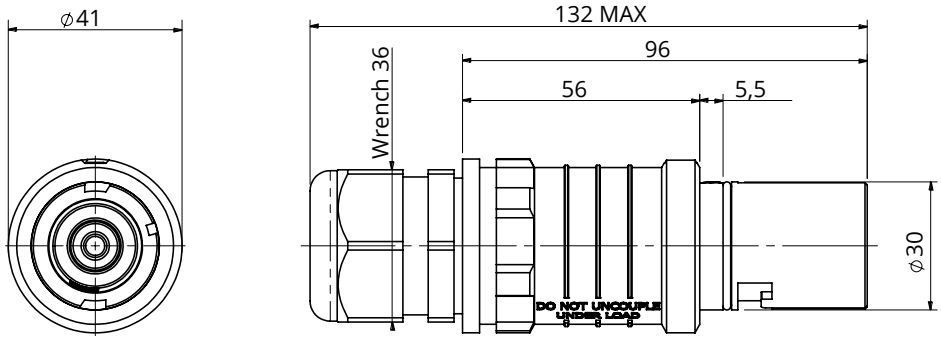

Cable/Line Drain Connectors OS (SPPC-HK-LD-xx-xx-x-xx-OS)

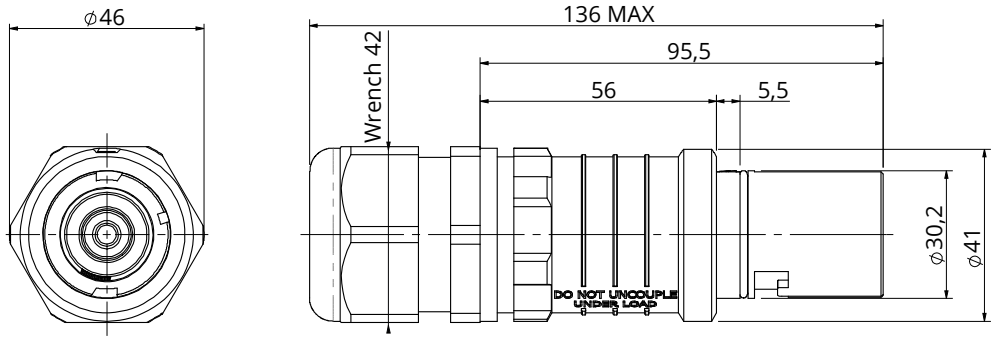

SPPC-HK Connectors - Cable/Line Connectors - 1200V - 250/400A

Cable/Line Source Connectors

Sleeves included, for cable conductor size - 16 mm² - 25 mm² - 35 mm² - 50 mm² - 70 mm² (for 16 mm² - 25 mm² see page 46)

250A - Screws terminal for conductor up to 70mm²

Color*	Short Description	Part Number
Brown – Phase L1	SPPC-HK-LS-L1-BR-S-70-M	VS440075
Black – Phase L2	SPPC-HK-LS-L2-BK-S-70-M	VS440055
Grey – Phase L3	SPPC-HK-LS-L3-GY-S-70-M	VS440076
Blue – Neutral	SPPC-HK-LS-N-BU-S-70-M	VS440077
Green – Earth	SPPC-HK-LS-E-GN-S-70-M	VS440078

400A - Crimp contacts 95mm² - 120mm²

Color*	Short Description	Part Number
Brown – Phase L1	SPPC-HK-LS-L1-BR-C-120-OS	VS440056
Black – Phase L2	SPPC-HK-LS-L2-BK-C-120-OS	VS440057
Grey – Phase L3	SPPC-HK-LS-L3-GY-C-120-OS	VS440062
Blue – Neutral	SPPC-HK-LS-N-BU-C-120-OS	VS440064
Green – Earth	SPPC-HK-LS-E-GN-C-120-OS	VS440063

Cable/Line Drain Connectors

Sleeves included, for cable conductor size - 16 mm² - 25 mm² - 35 mm² - 50 mm² - 70 mm² (for 16 mm² - 25 mm² see page 46)

250A - Screws terminal for conductor up to 70mm²

Color*	Short Description	Part Number
Brown – Phase L1	SPPC-HK-LD-L1-BR-S-70-M	VS440002
Black – Phase L2	SPPC-HK-LD-L2-BK-S-70-M	VS440054
Grey – Phase L3	SPPC-HK-LD-L3-GY-S-70-M	VS440073
Blue – Neutral	SPPC-HK-LD-N-BU-S-70-M	VS440074
Green – Earth	SPPC-HK-LD-E-GN-S-70-M	VS440036

400A - Crimp contacts 95mm² - 120mm²

Color*	Short Description	Part Number
Brown – Phase L1	SPPC-HK-LD-L1-BR-C-120-OS	VS440028
Black – Phase L2	SPPC-HK-LD-L2-BK-C-120-OS	VS440029
Grey – Phase L3	SPPC-HK-LD-L3-GY-C-120-OS	VS440030
Blue – Neutral	SPPC-HK-LD-N-BU-C-120-OS	VS440027
Green – Earth	SPPC-HK-LD-E-GN-C-120-OS	VS440026

**European Harmonized Color Set, others colors set on request*

SPPC-HK Connectors - Panel Connectors - 1200V - 250/400A

Panel Source Connectors

250A - M12 Threaded post for conductor up to 70mm²

Color*	Short Description	Part Number
Brown – Phase L1	SPPC-HK-PS-L1-BR-M12-T2	VS440004
Black – Phase L2	SPPC-HK-PS-L2-BK-M12-T2	VS440017
Grey – Phase L3	SPPC-HK-PS-L3-GY-M12-T2	VS440071
Blue – Neutral	SPPC-HK-PS-N-BU-M12-T2	VS440072
Green – Earth	SPPC-HK-PS-E-GN-M12-T2	VS440018

400A - M12 Threaded post for conductor up to 120mm²

Color*	Short Description	Part Number
Brown – Phase L1	SPPC-HK-PS-L1-BR-M12-T4	VS440033
Black – Phase L2	SPPC-HK-PS-L2-BK-M12-T4	VS440034
Grey – Phase L3	SPPC-HK-PS-L3-GY-M12-T4	VS440035
Blue – Neutral	SPPC-HK-PS-N-BU-M12-T4	VS440032
Green – Earth	SPPC-HK-PS-E-GN-M12-T4	VS440031

Panel Drain Connectors

250A - M12 Threaded post for conductor up to 70mm²

Color*	Short Description	Part Number
Brown – Phase L1	SPPC-HK-PD-L1-BR-M12-T2	VS440024
Black – Phase L2	SPPC-HK-PD-L2-BK-M12-T2	VS440025
Grey – Phase L3	SPPC-HK-PD-L3-GY-M12-T2	VS440069
Blue – Neutral	SPPC-HK-PD-N-BU-M12-T2	VS440070
Green – Earth	SPPC-HK-PD-E-GN-M12-T2	VS440001

400A - M12 Threaded post for conductor up to 120mm²

Color*	Short Description	Part Number
Brown – Phase L1	SPPC-HK-PD-L1-BR-M12-T4	VS440011
Black – Phase L2	SPPC-HK-PD-L2-BK-M12-T4	VS440065
Grey – Phase L3	SPPC-HK-PD-L3-GY-M12-T4	VS440066
Blue – Neutral	SPPC-HK-PD-N-BU-M12-T4	VS440068
Green – Earth	SPPC-HK-PD-E-GN-M12-T4	VS440067

**European Harmonized Color Set, others colors set on request*

SPPC-HK Connectors - Panel Drain Connectors - 1200V - 250/400A

with Normally Open Microswitch

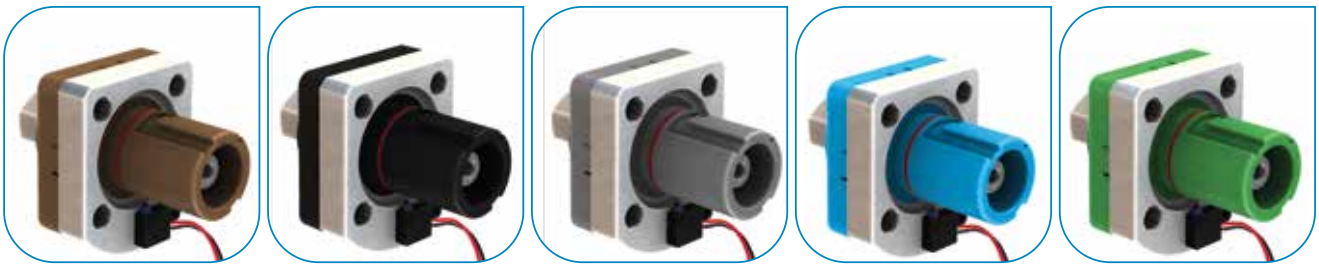

250A - M12 Threaded post for conductor up to 70mm²

Color*	Short Description	Part Number
Brown – Phase L1	SPPC-HK-PD-L1-BR-M12-T2-SW	on request
Black – Phase L2	SPPC-HK-PD-L2-BK-M12-T2-SW	on request
Grey – Phase L3	SPPC-HK-PD-L3-GY-M12-T2-SW	on request
Blue – Neutral	SPPC-HK-PD-N-BU-M12-T2-SW	on request
Green – Earth	SPPC-HK-PD-E-GN-M12-T2-SW	on request

400A - M12 Threaded post for conductor up to 120mm²

Color*	Short Description	Part Number
Brown – Phase L1	SPPC-HK-PD-L1-BR-M12-T4-SW	on request
Black – Phase L2	SPPC-HK-PD-L2-BK-M12-T4-SW	on request
Grey – Phase L3	SPPC-HK-PD-L3-GY-M12-T4-SW	on request
Blue – Neutral	SPPC-HK-PD-N-BU-M12-T4-SW	on request
Green – Earth	SPPC-HK-PD-E-GN-M12-T4-SW	on request

**European Harmonized Color Set, others colors set on request*

SPPC-HK Connectors - Crimping Tool

It is recommended to apply multiple crimp compressions in accordance with the above table to obtain optimum mechanical and electrical performance.

The correct sequence of compressions is shown in Fig.2.

Use the following tool:
- Hand operated crimp tool: HT120

Due to the numerous cable types available, it is recommended to contact our Customer Service to confirm cable & crimp suitability.

Cable Size	Up to 70mm²	95mm²	120mm² AWG 4/0
Insulation Strip (dim L)	26mm	20mm	20mm
Recommended Number of Crimps	N/A (set screw)	2	2
Hand Operated Crimp Tool	N/A	HT120	HT120
Crimp Die Set	N/A	ME24-C	ME29-C
Contact Removal Tool	VS750070	VS750070	VS750070

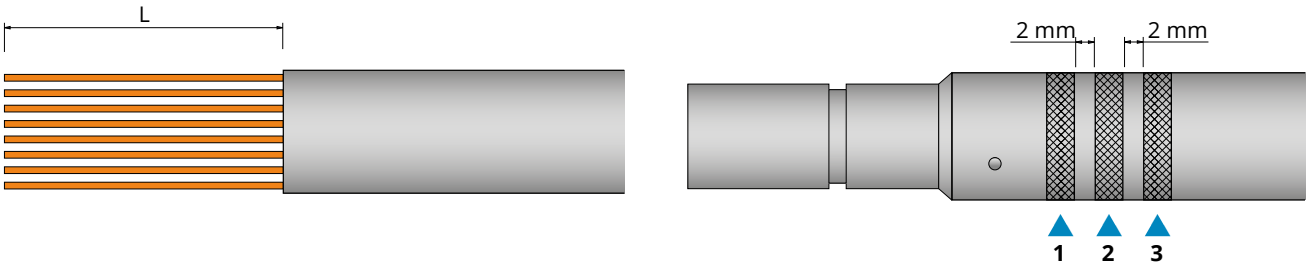

Fig.2

Hand Operated Crimp Tool HT120

SPPC-HK Connectors - Accessories

Cable Gland - for Cable/Line Connectors

Type	Short Description	Part Number
M32 threaded 7mm – 15mm	SPPC-HK-M32-S	VS750061
M32 threaded 11mm-21mm	SPPC-HK-M32-M	VS750060
M32 threaded 15mm-25mm	SPPC-HK-M32-OS	*

** On request*

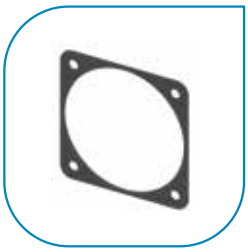

Panel Gasket

Type	Short Description	Part Number
Neoprene Gaskets	SPPC-HK-PG	750032

Sleeve For Screw Terminal for cable conductor size - 16 mm² - 25 mm²

Type	Short Description	Part Number
Sleeve	SPPC-HK-SL1625	VS750064

It is mandatory to use the bolts supplied with the kit

SPPC-HK Connectors - Contact Removal Tool

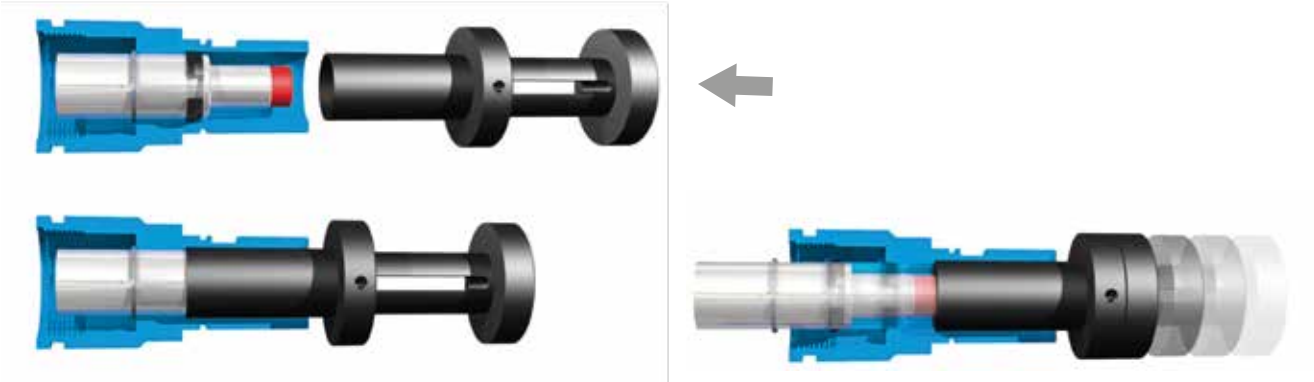

The contacts are inserted from the rear and snap into position within the insulator with no requirements for any cotter/dowel pin or assembly tool.
The contacts are removed from the insulator by using a simple tool to release the retaining clip.

- Improved mechanical insulator strength
- Reliable sealing
- Improved electrical integrity of the insulator
- Reduced assembly times
- The contacts can be removed and replaced

No replacement parts (cotter/dowel pins) are required.

Type	Short Description	Part Number
Crimp and Screw contacts	SPPC-HK-RT	VS750070

SPPC-HK Connectors

Derating data for 85°C rubber insulated cables

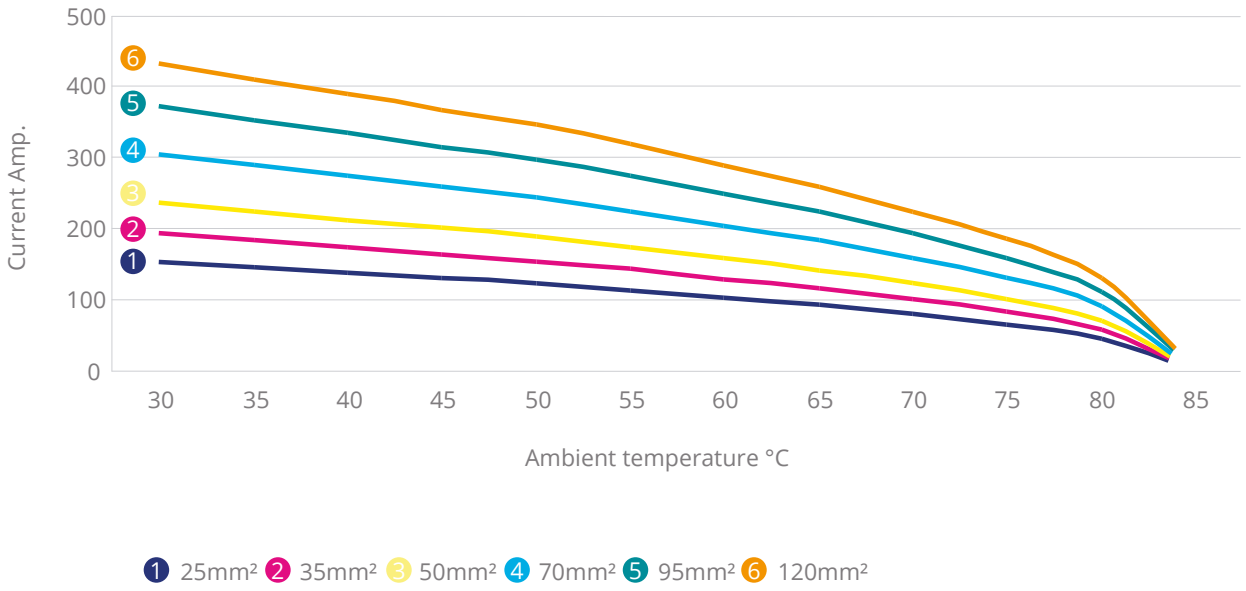

Characteristics

Operating Voltage	1200V AC or DC
Maximum panel thickness to guarantee insulation	6mm
Panel contact tightening torque	30Nm Max
Screws tightening torque (in-line connectors)	12Nm
Contact retention in Insulator	400N axial load
Inline contact retention	Plastic Clip
Panel mount contact retention	Dowel Pin
Contact release	Front
M32 Clamping range	7mm ÷ 25mm
Flammability	UL94 V0
Environmental sealing (when mated)	IP67
Connector protection (unmated)	IP2X
Rated voltage to Earth	1750Vac, panel thickness<4mm
	1200Vac, panel thickness>4mm
Contact resistance	<0.1mΩ
Short circuit current	11KA -1 seconds
Short circuit current	4KA – 3 seconds
Surge current (din VDE 0102/1.90)	45KA – 10 mseconds
Temperature range	-30°C/+120°C

SPPC-LJP Connectors - Introduction

LUG-IT - Power cable joining system

LUG-IT 300

LUG-IT 120

SPPC-LJP Connectors - Introduction

LUG-IT - Power cable joining system

LUG-IT 300

LUG-IT 120

LUG-IT is a safe and efficient means to make temporary connection / extensions of single core power cables that are pre-terminated with copper lug terminals.

APPLICATIONS

- Power distribution
- Utilities
- Electric Vehicles
- Railway Equipment
- Military Field Power
- Mobile Generators
- Loadbanks
- Back-up Power Systems

KEY CHARACTERISTICS

- Increase cable utilization
- Reusable
- Suitable for temporary connections
- Standardize on cable lengths held in stock
- Decrease cable purchase
- Reduce transportation of cables between sites
- No need for connectors or junction boxes
- Daisy chain hook up system

DETAILS

- Nominal Voltage Un: 1000Vac
- 2 Lug-it sizes available according to the lug and cable dimensions:
  - LJP-120 from 35mm² up to 120mm²
  - LJP-300 from 185mm² up to 300mm².
- Test voltage: 5.000Vac
- Rated current (to be checked with the specific cable characteristics):
  - Lugs 120 mm²:350A (30°C)
  - Lugs 185 mm²:570A (30°C)
  - Lugs 240 mm²:670A (30°C)
  - Lugs 300 mm²:780A (30°C)
- Working temperature: -30°C ÷ +120°C
- Protection degree: IP67 (EN 60529)
- Audible and tactile indication of locking
- Secure lock for unwanted / unauthorised release
- Quick assembly in approx. 2 minutes without special tools. The system can be disassembled and reused

SPPC-LJP Connectors - Dimensions

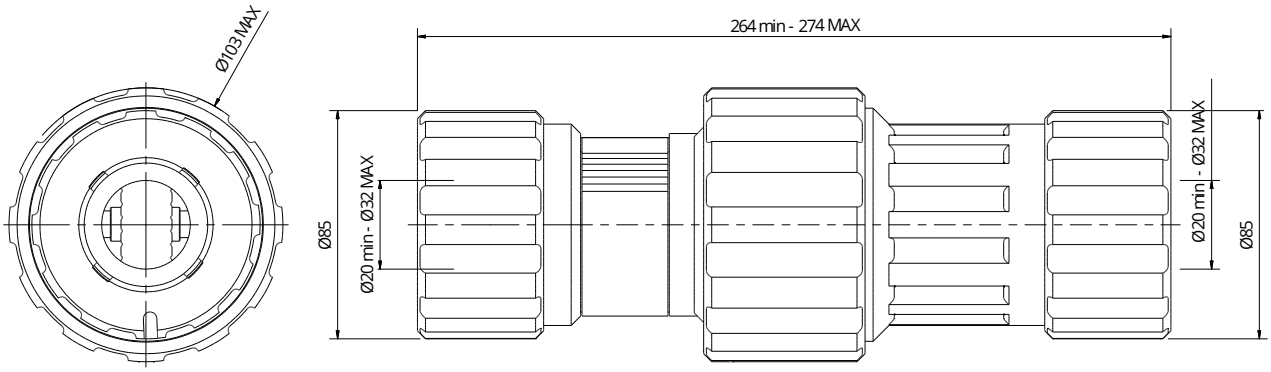

LUG-IT 300

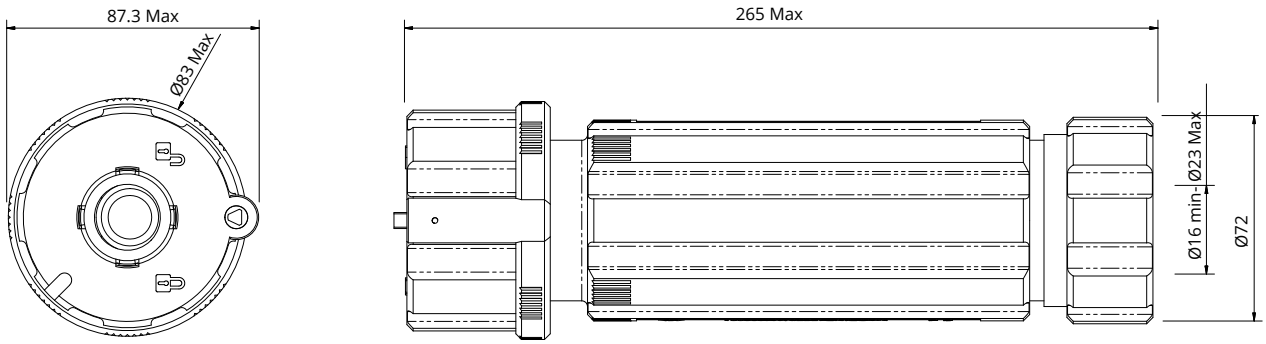

LUG-IT 120

Materials and finishes

Shells	thermoplastic resin
Contact-parts	copper alloy
Gaskets	silicone compound
Other parts	thermoplastic resin and stainless steel

SPPC-LJP Connectors - LUG-IT 300 - 1000V

Accepts cables 185mm², 240mm² and 300mm², for lugs with 12mm holes,
Lug Palm Width 45mm max, Bolt Hole 12mm,
External Cable Ø 20mm – 32mm.

Short Description	Part Number
SPPC-LJP-300	VS354801

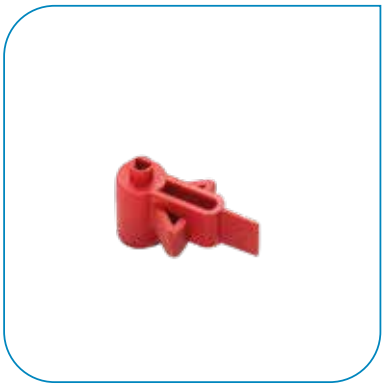

LUG-IT KEY

remote locking/release key

Short Description	Part Number
SPPC-LJP-KEY	VS750082

Lock the central locking ring using the remote release key.

SPPC-LJP Connectors - LUG-IT 300

Assemble component parts over the lugs and onto the cables. The special gaskets easily allow this step.

Lug Palm Width 45mm max, Bolt Hole 12mm,

Terminate the lugs into the joining block using the correct lugs shoulders. The system is designed to avoid using any loose parts.

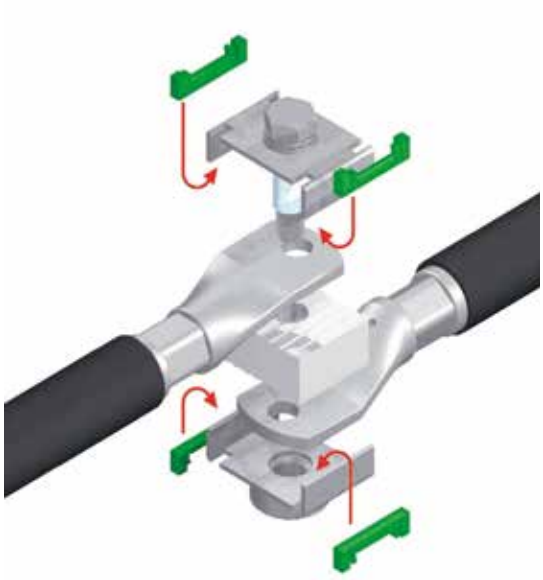

Ensure the back shell keyways are correctly positioned to mate with each other.

Rotate the central locking ring till it snaps into fully mated postion. Tighten the two back nuts.

SPPC-LJP Connectors - LUG-IT 120 - 1000V

Accepts cable 35mm2 up to 120mm2, for lugs with 8,2mm holes,
Lug Palm Width 30mm max, Bolt Hole 10mm or 12mm,
External Cable Ø 16mm – 23mm.

Short Description	Part Number
SPPC-LJP-120	VS354804

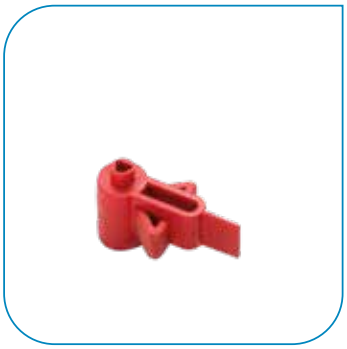

LUG-IT KEY

remote locking/release key

Short Description	Part Number
SPPC-LJP-KEY	VS750082

Lock the central locking ring using the remote release key.

Lug Palm Width 30mm max, Bolt Hole 10mm or 12mm.

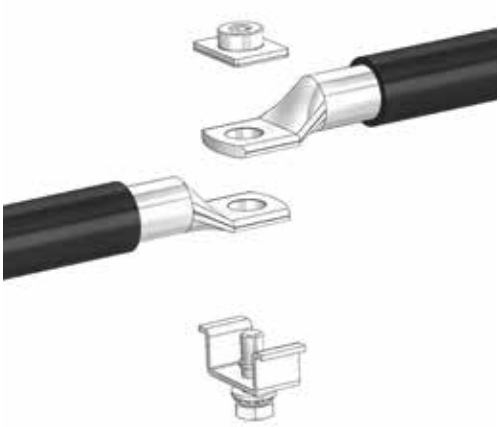

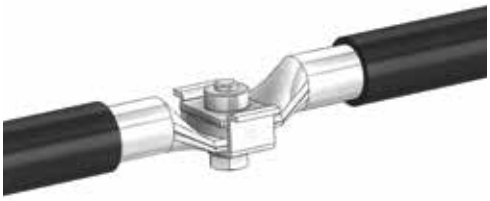

Information regarding the use of the product within recommended safety limits

To use the connectors described in this catalogue according to the necessary safety requirements we suggest you apply the following criteria:

- use the connectors and connected cables within their electrical and environmental limits
- follow the characteristics of each version (shell, class and type of strain relief) and carefully choose the appropriate connector for the required use
- make sure to respect the procedures regarding the correct assembly of connectors and the crimping of contacts
- any connector damaged during shipment, storage, assembly or use should be replaced
- never uncouple the connectors when under power
- always protect the parts against shock when the circuit is under power
- always check the circuit before putting it under power
- consult Radiall Italia Srl if in doubt
- the user must take final responsibility for electrical safety Radiall Italia Srl reserves the right to amend the specifications of this catalogue without issuing prior notice.

For the instructions concerning assembly and crimping of contacts please consult the appropriate tools manuals.

We recommend to respect the following general rules:

- to be used always the tools recommended by Radiall Italia Srl's catalogue or manuals
- to be applied the suggested norms for tool maintenance and calibration

DO NOT USE ALTERNATIVE GREASES OR OILS which could damage the insert and affect the functionality of the connector.
Radiall Italia Srl reserves the right to amend the specifications of this catalogue without issuing prior notice.

The data defined in this document are given as an indication. In the effort to improve our products, we reserve the right to make any change judged necessary.

www.radiall.com

FRANCE
RADIALL S.A.
Tel +33149353535
info@radiall.com

www.vansystem.eu

ITALY
Radiall Italia S.r.l.
Tel. +39023569931
info.vansystem@radiall.com

050.SPPC014
PRINTED IN ITALY

2021 EDITION
07.2021