EPX® SERIES

EN4644

Section 1 Table of Contents

INTRODUCTION

Introduction 1-3
Disconnect Applications 1-4
Rack & Panel Applications 1-5

EPX® SERIES

Disconnect Connectors 1-6
Electrical Characteristics 1-6
Mechanical Characteristics 1-6
Environmental Characteristics 1-6
Rack & Panel Connectors 1-7
Electrical Characteristics 1-7
Mechanical Characteristics 1-7
Environmental Characteristics 1-7
Inserts & Contact 1-8
Electrical Characteristics 1-8
Retention Characteristics 1-9

INSERTS

Insert Selection Table 1-10
How to Order EPX® Inserts 1-11
EPX® Insert Arrangements ..... 1-12 to 1-14

CONTACTS

Signal & Power Crimp Contacts 1-15
Oversized & Reduced Crimp Barrel Contacts 1-16
Coaxial Crimp Contacts 1-17
Twinax & Triax Crimp Contacts 1-18
Quadrax & BMA Crimp Contacts 1-19
LuxCis® Fiber Optic Contacts 1-20
Signal PC Tail Contacts 1-21
Quadrax Size 8 PC Tail Contacts 1-22
Filler Plugs & Sealing Plugs 1-23

Section 1 Table of Contents Continued

DISCONNECT APPLICATION

EPXA Product Overview 1-24
EPXB1 Product Overview 1-25
How to Order EPXA & EPXB1 Shell 1-26
How to Order EPXA & EPXB1 Assembly Kit 1-27
EPXA & EPXB1 Polarization Code 1-28
Contacts Termination for EPXB1 1-29
EPXA Shell Dimensions 1-30
EPXB1 Shell Dimensions 1-31
EPXA & EPXB1 Spare Parts 1-32
EPXA & EPXB1 Accessories 1-33
EPXB2 Product Connectors 1-34
EPXB2 Product Overview 1-35
EPXB2 Range Overview 1-36
EPXB2 Latest Innovations 1-37
How to Order EPXB2 Shell 1-38
How to Order EPXB2 Assembly Kit 1-39
EPXB2 Polarization Code 1-40
Contacts Termination for Receptacles 1-41
EPXB2 Alluminum Shell Dimensions ..... 1-42 to 1-43
EPXB2 Composite Shell Dimensions 1-44
EPXB2 Weights 1-45
EPXB2 Accessories 1-46
EPXB2 Spare Parts 1-47
Tools 1-48

RACK & PANEL APPLICATION

EPXB3 Product Overview 1-49
How to Order EPXB1, B2, B3 & B4 Shell 1-50
How to Order EPXB1, B2, B3 & B4 Assembly Kit for LRM 1-51
EPXB Shell Mounting 1-52
EPXB Polarization Code 1-53
Contacts Termination for EPXB1, B2, B3 & EPXB4 Plugs 1-54
EPXB1 Shell Dimensions & Panel Cut-Out 1-55
EPXB2 Shell Dimensions & Panel Cut-Out 1-56
EPXB3 Shell Dimensions & Panel Cut-Out 1-57
EPXB4 Shell Dimensions & Panel Cut-Out 1-58
Rack & Panel Accessories 1-59
Rack & Panel Tools 1-60
EPXB2 Product Overview 1-61
How to Order EPXB2 Shell for LRU 1-62
How to Order EPXB2 Assembly Kit for LRU 1-63
EPX® Galley ARINC 810 Product Overview 1-64
How to Order EPX® Galley Equipment Connector 1-65
Dimensions & Panel Cut-Out 1-66
Multigang EPX Connectors 1-67

INTRODUCTION

Radiall is recognized in the aerospace and defense industries for offering one of the broadest innovative product portfolios for connector interconnect solutions. The benefit of our experience with ARINC connectors permits Radiall to provide customers with a strong and global solution.

The EPX® series offers a wide range of solutions based on two insert sizes with a large variety of shells and contacts. This product range provides an excellent trade-off between the number of available contacts and the space used. The EPX® series is completely modular and expandable.

EPX® connectors are standardized by the EN4644 European standard.

A **high-density solution** compared to circular connectors:

- Slim shell design with high contact density
- Stackable shells do not require additional space for locking and unlocking the connectors

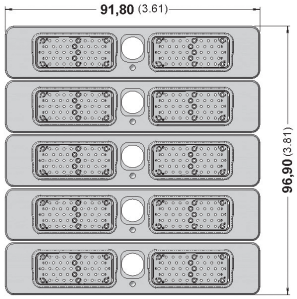

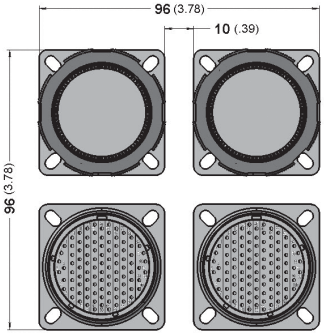

EPXB

*5 shells #2 with 2*48 Cts*

- ***Total Cts:*** *480*
- ***Total surface:*** *96.90 * 91.80 = 8895.42 mm²*
- *Gives 18.53 mm²/contact*

38999

4 shells #23 with 100 Cts

- ***Total Cts:*** *400*
- ***Total surface:*** *96.00 * 96.00 = 9216 mm²*
- *Gives 23.04 mm²/contact*

A **cost saving** and **user-friendly** solution:

- Inserts can be wired in the workshop and later installed in the shells
- A common panel cut-out simplifies the connector installation
- Inserts can be easily installed and removed from the shell
- Inserts and shells are keyed to prevent mis-mating
- Standard Mil spec tools for contact crimping and contact insertion/extraction
- Field replaceable sub-assemblies
- Vibration resistant self-locking threads

A **modular concept** with a large variety of options:

- Shell can accommodate a wide variety of inserts for signal, power, coax, data bus, fiber optic and high-frequency BMA contacts
- Optional ground blocks (to meet the FAA HIRF requirements)
- Pin and socket inserts can be installed in either plug or receptacle shells (pin contacts are always fitted in the pin insert)

EPX® is a **versatile solution** available in two different versions:

- Aluminium
- Composite

Introduction

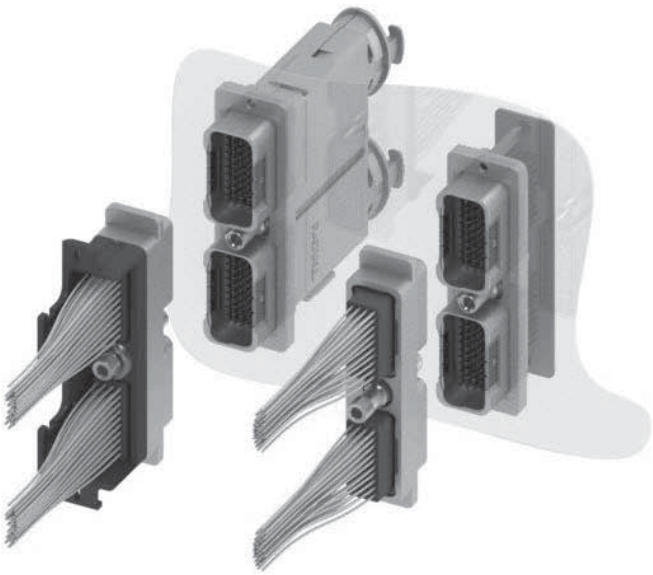

CABLE-CABLE **PCB-CABLE**

DISCONNECT APPLICATIONS

Specially designed for panel integration on EWIS applications, EPX® disconnect connectors cover cable-to-cable and PCB-to-cable links in major commercial and business jet aircrafts.

The connector can be easily identified by the locking device located directly on the connector (quarter turn device for A1 and B1 and central screws for EPXB2). This disconnect solution offers secure mating while answering OEM's most stringent requirements, and provides:

- Modularity with three shell sizes: EPXA1, EPXB1 and EPXB2 - available as lightweight shells and compatible with several options such as ground block functionality. EPX® connectors also feature a large variety of inserts and a unique range of contacts covering any technology. EPX® connectors answer all connecting needs with the use of a limited number of components.
- Space savings with the combination of a slim shell design and high density inserts. In addition, EPX® disconnect stackable shells do not require additional space to lock and unlock the connectors.
- Time savings and cost effectiveness with modular parts that enable pre-wiring. Connectors are easy to assemble as the receptacle can be pre-installed. Inserts will be wired in the shop and plugged later, which saves integration time.

EPXA1

EPXB1

EPXB2

RACK & PANEL APPLICATIONS

In response to the need of system miniaturization and new equipment design, Radiall offers EPX® connector solutions for Line Replaceable Unit (LRU) and Line Replaceable Module (LRM). Discover more about these blind mate connectors:

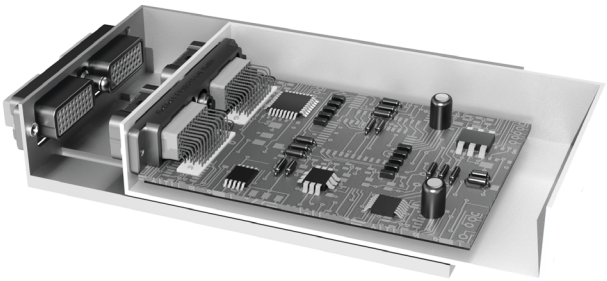

EPXB2 FOR LRU

EPXB2 FOR LRU

Largely used in distributed architecture, small Line Replaceable Units in an aircraft need compact, lightweight and cost-effective connectors.

EPXB2 connectors equipped with centering guide will combine high density, low efforts and lightweight features. Discover the whole range of EPXB inserts offering from signal to power or quadrax contacts (available in straight or right angle PC tails and crimp contacts).

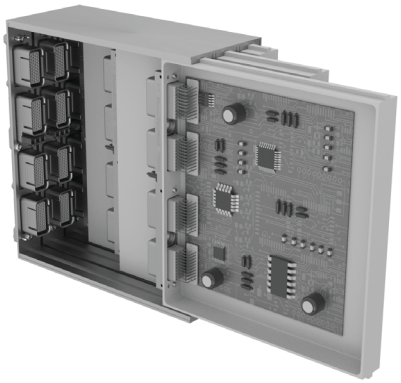

EPX RACK & PANEL FOR LRM

EPX RACK & PANEL FOR LRM

Today, equipment manufacturers look for more cost-effective and easy to maintain solutions such as Line Replaceable Module (LRM). As a result, Radiall has developed a new generation of Rack & Panel connectors. EPX® Rack & Panel connectors feature a modular, lightweight and high density shell that can be used on standalone PCB architecture.

EPX® Rack & Panel connectors are the perfect solution when equipment needs to combine compactness, weight savings and very high density. They offer:

- A modular range: From size 1 to size 4 using the complete range of EPX® inserts.
- Low mating force contacts from EPX® range that can reach very high density.
- A comprehensive range of contacts: Right angle or straight PC tails for signal, coax, quadrax, or power contacts.

EPX® Series

DISCONNECT CONNECTORS

ELECTRICAL CHARACTERISTICS

EMI Shielding Effectiveness EN2591-213

FREQUENCY (MHz)	LEAKAGE ATTENUATION (dB)
100	65
200 or 300	63
400	62
500 and 600	60

OTHER CHARACTERISTICS

- **Shell-to-Shell Conductivity:** < 2.5 mΩ
- **Operating Voltage:** 400 VRMS or 500 VDC at sea level, according to EN2591-205
- **Voltage Stability (Ground Block):** Maximum variation 4 mV according to SAE AS 81714 (MIL-T-81714)
- **Lightning Strike:**
  - 5 kA - 1,600 V for EPX® connectors in aluminium version
  - 3 kA - 1,600 V for EPX® connectors in composite version

MECHANICAL CHARACTERISTICS

MATING/UNMATING

SHELL TYPE	MATERIAL	MATING/UNMATING
EPXA1/EPXB1/EPXB2	Aluminium	100 Cycles
EPXB1/EPXB2	Composite	100 Cycles

- EPXB2 mating torque: 1.2N.m +/- 0.1

VARIATION & SHOCK

SHELL TYPE	MATERIAL	VIBRATION *For 8 hrs on Each of the 3 Axis/Interruption < 1 µs EN2591-403 EIA 364-28*	SHOCK *3 Shocks on Each Axis EN2591-402 EIA 364-27*
EPXA1 / EPXB1	Aluminium	Acceleration 27.8 g (Test Condition 6 Letter G)	Shock Amplitude 50 g/Duration 11 ms
EPXB1 / EPXB2	Composite		
EPXB2	Aluminium		100 Shock Amplitude 300 g/Duration 3 ms
Disconnect EPX® with Quadrax Contacts	-	Acceleration 16.9 g (Test Condition 5 Letter E)	100 Shock Amplitude 50 g/Duration 11 ms

ENVIRONMENTAL CHARACTERISTICS

- **Temperature Range:** according to EIA364-32 and EN2591-305
  - For EPXB2 aluminium, EPXB1 and EPXA1 shells: -65 °C/+175 °C (-85 °F/+347 °F)
  - For EPXB2 composite shell: -65 °C/+125 °C (-85 °F/+257 °F)
- **Temperature Life:** 1,000 hours at maximum temperature
- **Salt Spray:** 96 hours (nickel-plated aluminium and composite) EN2591-307 EIA 364-26 test condition A
- **Humidity:** 10 days with temperature variation from -10 °C to +65 °C EIA 364-31 Method 4, test condition B
- **Altitude Immersion:** EN2591-314 EIA 364-03:
  - EPXB insert: 3 cycles at 50,000 ft
  - EPXB Bulkhead class insert: 3 cycles at 55,000 ft
- **Air Leakage for EPXB2 Bulkhead Receptacle:** Level from EN3645; test according EN2591-312 method B:
  - 4.4×10^{-3} cm^3/s (= 16 × 10-6 m^3/h)

RACK & PANEL CONNECTORS

ELECTRICAL CHARACTERISTICS

EMI Shielding Effectiveness EN2591-213

FREQUENCY (MHz)	LEAKAGE ATTENUATION (dB)
100	65
200 and 300	63
400	62
500 and 600	60

OTHER CHARACTERISTICS

- **Shell-to-Shell Conductivity:** < 2.5 mΩ according to EN2591-205
- **Lightning Strike:** 5 kA - 1,600 V

MECHANICAL CHARACTERISTICS

MATING/UNMATING

SHELL TYPE	MATERIAL	MATING/UNMATING
EPXB1/EPXB2/EPXB3/EPXB4	Aluminium	500 Cycles

The minimum mating forces are described in the EN4644 standard and depends on the connector size and insert arrangement. Consult Radiall for more information.

VARIATION & SHOCK

SHELL TYPE	MATERIAL	VIBRATION *For 8 hrs on Each of the 3 Axis/Interruption < 1 µs EN2591-403 EIA 364-28*	SHOCK *3 Shocks on Each Axis EN2591-402 EIA 364-27*
EPXB1/EPXB2/EPXB3/EPXB4	Aluminium	Acceleration 16.9 g (Test Condition 5 Letter E)	Shock Amplitude 50 g/Duration 11 ms

ENVIRONMENTAL CHARACTERISTICS

- **Temperature Range:** -65 °C/+125 °C (-85 °F/+257 °F)
- **Temperature Life:** 1,000 hours at maximum temperature
- **Salt Spray:** 96 hours EN2591-307 EIA 364-26 test condition A
- **Humidity:** 10 days with temperature variation from -10 °C to +65 °C EIA 364-31 Method 4, test condition B
- **Altitude Immersion:** 3 cycles at 50,000 ft EN2591-314 EIA 364-03

EPX® Series

INSERTS & CONTACT

ELECTRICAL CHARACTERISTICS

Electrical characteristics conform to SAE AS 39029 (MIL-C-39029, type A). Contacts conform to EN3155-076 and EN3155-077.

CONTACTS

CONTACT SIZE	WIRE SIZE	MAX CURRENT AMPS
22	AWG22	5
	AWG24	3
	AWG26	2
20	AWG20	7.5
	AWG22	5
	AWG24	3
16	AWG16	13
	AWG18	10
	AWG20	7.5
12	AWG12	23
	AWG14	17
	AWG16	13
8	AWG8	46
5	AWG8	46 [1]
	AWG12	23
	AWG16	13

GROUND BLOCK CONTACT

617221050

	CONTACT WITH WIRE SIZE	MAX CURRENT AMPS
Contact to Contact	Contact + AWG20	7.5
Contact to Mounting Surface	Contact + AWG20	7.5

DIELECTRIC WITHSTANDING VOLTAGE

EN2591-207 EIA 364-20 with Leakage Current < 1mΩ

LEVEL	ENVIRONMENTAL INSERTS VOLTAGE (VRMS)	NON-ENVIRONMENTAL INSERT VOLTAGE (VRMS)
Sea Level	1,500	1,500
50,000 feet	800	600
70,000 feet	800	300

INSULATION RESISTANCE

EN2591-206 EIA 364-21

TEMPERATURE	INSULATION RESISTANCE
Ambient Temperature	> 5,000 mΩ
175 °C (+347 °F)	> 200 mΩ

Notes

1. Size 5 contacts are not part of SAE AS 39029 (MIL-C-39029, type A).

INSERTS & CONTACT

RETENTION CHARACTERISTICS

Retention forces indicated below are valid for terminated contacts (as per EN2591-409 and EIA364-29).

CONTACT SIZE	RETENTION FORCE	MAX DISPLACEMENT
Ground Block	88 N (20 lbs)	0.30 mm (0.012 in.)
22	53.4 N (12 lbs)	0.38 mm (0.015 in.)
20	89 N (20 lbs)	0.38 mm (0.015 in.)
16	111.2 N (25 lbs)	0.38 mm (0.015 in.)
12	133.45 N (30 lbs)	0.38 mm (0.015 in.)
8	133.45 N (30 lbs)	0.38 mm (0.015 in.)
5	133.45 N (30 lbs)	0.38 mm (0.015 in.)

- **Insert Retention:** 400 N (90 lbs) (EN2591-410 EIA 364-35)
- **Maximum Insert Displacement in the Shell Cavity:** 0.30 mm (0.012 in.)

Inserts

INSERT SELECTION TABLE

Insert name should be used when ordering EPX® insert.
Insert code should be used when ordering EPX® assembly kit
Inserts available in Bulkhead class are identified with the following icon:

SERIES	INSERT NAME	INSERT CODE	CONTACT SIZE & TYPE [1]										TOTAL CONTACTS
			22*	20*	15 OR 16*	16	16	12*	8	8	5	5	
			SIGNAL	POWER	POWER OR COAX	LUXCIS® FIBER OPTIC	POWER IN FIBER OPTIC CAVITY	POWER OR COAX	POWER	QUADRAX OR TWINAX	COAX OR TRIAX	POWER	
EPXA	00	0	-	-	-	-	-	-	-	-	-	-	0
	1C1	A	-	-	-	-	-	-	-	-	1	-	1
	1P1	B	-	-	-	-	-	-	-	-	-	1	1
	04	C	-	-	2	-	-	2	-	-	-	-	4
	09	D	-	3	6	-	-	-	-	-	-	-	9
	14	E	-	14	-	-	-	-	-	-	-	-	14
	14M	F	8	3	3	-	-	-	-	-	-	-	14
	17	G	12	5	-	-	-	-	-	-	-	-	17
	20	H	20	-	-	-	-	-	-	-	-	-	20
EPXB	00	0	-	-	-	-	-	-	-	-	-	-	0
	C3	A	-	-	-	-	-	-	-	-	3	-	3
	P3	B	-	-	-	-	-	-	-	-	-	3	3
	3Q3	C	-	-	-	-	-	-	-	3	-	-	3
	06	D	-	-	-	-	-	6	-	-	-	-	6
	10Q2	E	-	8	-	-	-	-	-	2	-	-	10
	12F6	F	-	-	-	6	6	-	-	-	-	-	12
	F12C	G	-	-	-	12	-	-	-	-	-	-	12
	13C1	H	-	6	4	-	-	2	-	-	1	-	13
	13P1	J	-	6	4	-		2	-	-	-	1	13
	14	K	-	-	14	-	-	-	-	-	-	-	14
	17	L	-	14	-	-	-	3	-	-	-	-	17
	20C1	M	-	19	-	-	-	-	-	-	1	-	20
	20P1	N	-	19	-	-	-	-	-	-	-	1	20
	22	P	-	16	6	-	-	-	-	-	-	-	22
	22V	Q	-	16	6	-	-	-	-	-	-	-	22
	25P1	R	24	-	-	-	-	-	1	-	-	-	25
	25Q1	S	24	-	-	-	-	-	-	1	-	-	25
	28	T	22	-	6	-	-	-	-	-	-	-	28
	30	U	-	30	-	-	-	-	-	-	-	-	30
	34	W	18	16	-	-	-	-	-	-	-	-	34
	40	X	40	-	-	-	-	-	-	-	-	-	40
	48	Y	48	-	-	-	-	-	-	-	-	-	48

Notes

1. *Only contacts marked with an asterisk (*) are included with EPX® insert kit. All other contacts must be ordered separately (i.e. coax, twinax, quadrax and fiber optic contacts).*

Inserts

HOW TO ORDER EPX® INSERTS

Only crimp contacts can be delivered with insert.

EPX

SERIES PREFIX

INSERT SIZE [1]
A: Insert for EPXA
B: Insert for EPXB1, EPXB2, EPXB3 or EPXB4

CLASS [2]
E: Environmental
N: Non-environmental (no rear grommet, no interfacial seal)
H: Non-environmental with a rear grommet, available for pin insert only (recommended for crimp contacts)
T: Non-environmental with an interfacial seal, available for pin insert only (recommended for PC tail contacts)
B: Bulkhead insert with interfacial seal and a Bulkhead rear grommet, available for pin insert only

INSERT NAME
Refer to table on page 1-10 for insert arrangements

INSERT TYPE
P: Pin
S: Socket

INSERT KEYING [3]
A: Keying A
B: Keying B

CONTACT
Without Code: Insert delivered without contacts
S: Signal and power contacts are delivered with inserts but are uninstalled (refer to page 1-10)
Inserts 00, 1C1, 1P1, C3, P3, 3Q3, 12F6, F12C and 3T3 are not available in S contact version

ENVIRONMENTAL INSERT

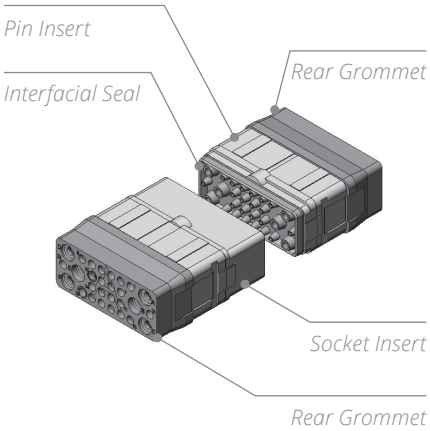

BULKHEAD INSERT

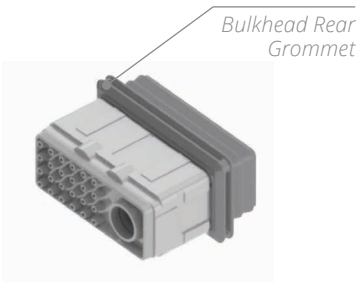

INSERT KEYING DETAIL

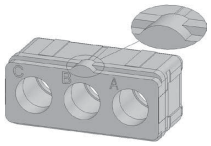

Keying A

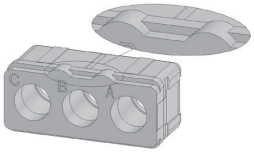

Keying B

Notes

1. Inserts are designed for rear-release and rear-removable contacts.
2. Pin and socket inserts can be installed in either plug or receptacle shell. F6, F12C and 12F6 are only available in E class. Insert 00 is only available in N class.
3. For EPXA1, EPXB1, EPXB3 and EPXB4 shells, use only insert keyed A. For EPXB2 shells, use one insert keyed A and one insert keyed B.

Inserts

EPX® INSERT ARRANGEMENTS

EPXA INSERT ARRANGEMENTS

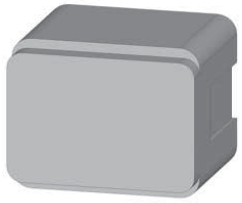	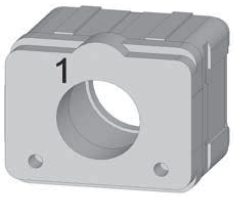	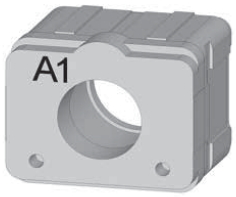	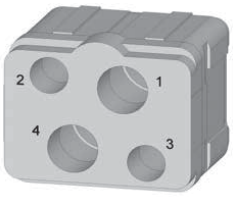
Insert Name 00 **Insert Code 0** Blank Insert [1]	**Insert Name 1C1** **Insert Code A** 1 × size 5 Coax Contacts	**Insert Name 1P1** **Insert Code B** 1 × Size 5 Power Contacts	**Insert Name 04** **Insert Code C** 2 × Size 15 or 16 Contacts 2 × Size 12 Contacts
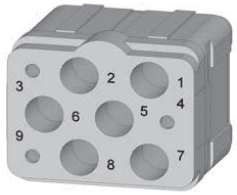	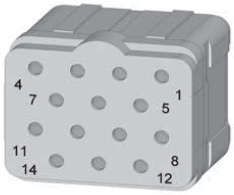	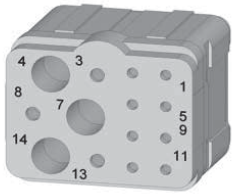	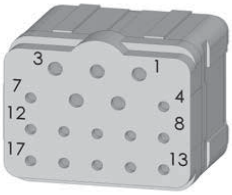
Insert Name 09 **Insert Code D** 3 × Size 20 Contacts 6 × Size 15 or 16 Contacts	**Insert Name 14** **Insert Code E** 14 × Size 20 Contacts	**Insert Name 14M** **Insert Code F** 8 × Size 22 Contacts 3 × Size 20 Contacts 3 × Size 15 or 16 Contacts	**Insert Name 17** **Insert Code G** 12 × Size 22 Contacts 5 × Size 20 Contacts
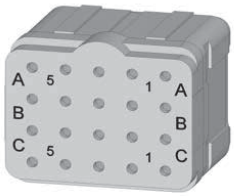			
Insert Name 20 **Insert Code H** 20 × Size 22 Contacts			

WEIGHTS

Average weight per class and type for EPXA inserts without contacts.

INSERT CLASS	INSERT TYPE	
	PIN	SOCKET
E	4.10 g (0.14 oz)	5.30 g (0.19 oz)
N	2.60 g (0.09 oz)	4.00 g (0.14 oz)
H	3.90 g (0.14 oz)	N/A
T	2.80 g (0.10 oz)	N/A

Notes

1. P/N for blank insert is EPXAN00.

Inserts

EPX® INSERT ARRANGEMENTS

EPXB INSERT ARRANGEMENTS

Full size inserts arrangements are compliant with EN4644.

	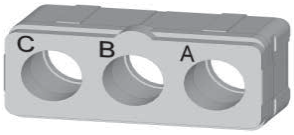	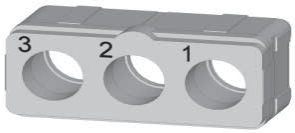	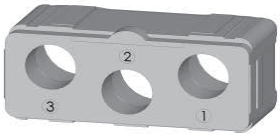
Insert Name 00 **Insert Code 0** Blank Insert [1]	**Insert Name C3** **Insert Code A** 3 × size 5 Coax Contacts	**Insert Name P3** **Insert Code B** 3 × Size 5 Power Contacts	**Insert Name 3Q3** **Insert Code C** 3 × Size 8 Quadrax Contacts
	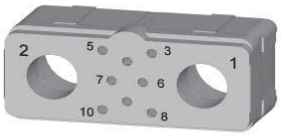		
Insert Name 06 **Insert Code D** 6 × Size 12 Medium Power Contacts	**Insert Name 10Q2** **Insert Code E** 8 × Size 20 Contacts 2 × Size 8 Quadrax Contacts	**Insert Name 12F6** **Insert Code F** 6 × Size 16 Optical LuxCis® Termini 6 × Size 16 Special Electrical Contacts	**Insert Name F12C** **Insert Code G** 12 × Size 16 Optical LuxCis® Termini
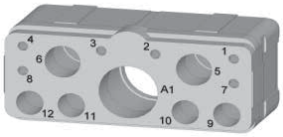	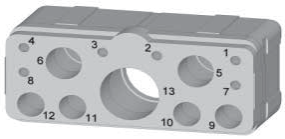		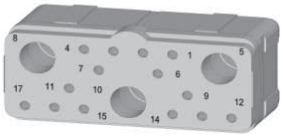
Insert Name 13C1 **Insert Code H** 6 × Size 20 Contacts 4 × Size 15 or 16 Contacts 2 × Size 12 Contacts 1 × Size 5 Coax Contacts	**Insert Name 13P1** **Insert Code J** 6 × Size 20 Contacts 4 × Size 15 or 16 Contacts 2 × Size 12 Contacts 1 × Size 5 Coax Contacts	**Insert Name 14** **Insert Code K** 14 × Size 15 or 16 Contacts	**Insert Name 17** **Insert Code L** 14 × Size 20 Contacts 3 × Size 12 Contacts
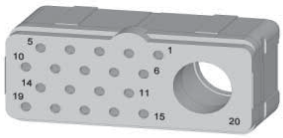	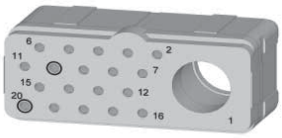		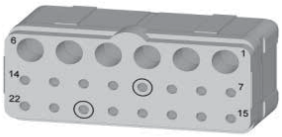
Insert Name 20C1 **Insert Code M** 19 × Size 20 Contacts 1 × Size 5 Coax Contacts	**Insert Name 20P1** **Insert Code N** 19 × Size 20 Contacts 1 × Size 5 Coax Contacts	**Insert Name 22** **Insert Code P** 16 × Size 20 Contacts 6 × Size 15 or 16 Contacts	**Insert Name 22V** **Insert Code Q** 16 × Size 20 Contacts 6 × Size 16 Contacts

Notes

1. P/N for blank insert is EPXBN00.

Inserts

EPX® INSERT ARRANGEMENTS

EPXB INSERT ARRANGEMENTS

Full size inserts arrangements are compliant with EN4644.

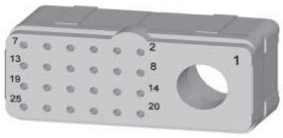	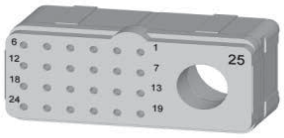	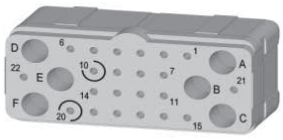	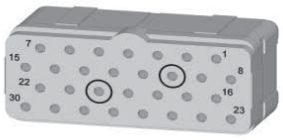
Insert Name 25P1 **Insert Code R** 24 × Size 22 Contacts 1 × Size 8 Power Contacts	**Insert Name 25Q1** **Insert Code S** 24 × Size 22 Contacts 1 × Size 8 Quadrax Contacts	**Insert Name 28** **Insert Code T** 22 × Size 22 Contacts 6 × Size 15 or 16 Contacts	**Insert Name 30** **Insert Code U** 30 × Size 20 Contacts
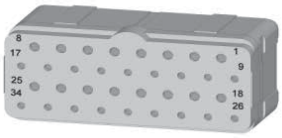	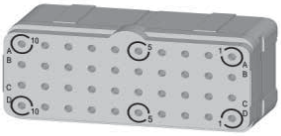	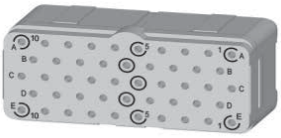	
Insert Name 34 **Insert Code W** 18 × Size 22 Contacts 16 × Size 20 Contacts	**Insert Name 40** **Insert Code X** 40 × Size 22 Contacts	**Insert Name 48** **Insert Code Y** 48 × Size 22 Contacts	

WEIGHTS

Average weight per class and type for EPXB inserts without contacts.

INSERT CLASS	INSERT TYPE	
	PIN	SOCKET
E	7.90 g (0.28 oz)	10.00 g (0.35 oz)
N	5.20 g (0.18 oz)	7.60 g (0.27 oz)
H	7.70 g (0.27 oz)	N/A
T	5.50 g (0.19 oz)	N/A
B	8.50 g (0.30 oz)	N/A

Contacts

SIGNAL & POWER CRIMP CONTACTS

EPX® series offers a wide range of contacts compliant with EN3155 and SAE AS 39029. The available contacts cover aerospace applications for terminating to both cables and printed circuit boards.

- Signal and power contacts
- High frequency with coax, twinax and triax contacts
- Ethernet links with Quadrax contacts
- Optical links with LuxCis® contacts

CONTACT SELECTION TABLE

CONTACT SIZE		WIRE SIZE	TYPE	ENVIRONMENTAL PART NUMBER	NON-ENVIRONMENTAL PART NUMBER	CRIMPING TOOL	POSITIONER	SELECTION	INS/EXT TOOL	MATERIAL OF TOOL
22		22	Pin	617200		282281 M22520/2-01	282970 M22520/2-23	4	282522 (M81969/14-01)	Plastic
		24						3		
		26	Socket	617300						
20		20	Pin	617221		282281 M22520/2-01	282971 M22520/2-08	7	282522001 (M81969/39-01)	Plastic
		22						6		
		24	Socket	617320				5		
16		16	Pin	617240		282291 M22520/1-01	282972 M22520/1-02	6	282515 (M81969/14-03)	Plastic
		18	Socket	617340				5		
		20						4		
	For Ground Block	20	Pin	617221050		282281 M225520/2-01	282581015 M22520/2-11	7	282886 M81969/1-02	Metal
			Socket	N/A						
	For Optical/ Electrical Cavity	16	Pin	617235003 [1]		282291 M22520/1-01	282581013	6	282515 (M81969/14-03)	Plastic
		18						5		
		20						4		
12		12	Pin	617250		282291 M22520/1-01	282972 M22520/1-02	8	282549004 (M81969/14-04)	Plastic
		14	Socket	617350				7		
		16						6		
8		8	Pin	617291007 for AWG8	617291002 [2&3]	R282600000 M22520/ 23-01 + Die set R282650000 M22520/23-02	282588	N/A	282549001	Metal
		10	Socket	617391008 for AWG8	617391002 [2&3]					
5		8	Pin	617280003 for Size 8, 617280004 for Size 10	617280 [2&4]	R282600000 M22520/ 23-01 + Die set R282650000 M22520/23-02	282557020	N/A	282946 (M81969/28-01)	Metal
		10	Socket	617390003 for Size 8, 617390004 for Size 10	617390 [2&4]		282557021			
		12	Pin	617260002	617260001 [2&4]	282613	282586003	6		
		16	Socket	617370005	617370001 [2&4]		282586005	4		

Notes

1. Electrical contacts for optical inserts are always pin contacts (hermaphrodite).
2. In order to make these contacts environmental, it is necessary to add a sealing boot. Please contact us for additional information.
3. These power contacts can be used in power inserts only (25P1).
4. These power contacts can be used in power inserts only (P3, 13P1 and 20P1).

Contacts

OVERSIZED & REDUCED CRIMP BARREL CONTACTS

CONTACT SIZE		WIRE SIZE	TYPE	PART NUMBER FULL PLATED	CRIMPING TOOL	POSITIONER	SELECTION	INS/EXT TOOL	MATERIAL OF TOOL
22	Reduced Crimp Barrel	28	Pin	617201	282281 M22520/2-01	282970 M22520/2-23	5	282522 (M81969/14-01)	Plastic
		30	Socket	617301			4		
	Oversize Crimp Barrel	20	Pin	617200200	282281 M22520/2-01	282970 M22520/2-23	5		
		22	Socket	617300200			4		
		24					3		
20	Reduced Crimp Barrel	22	Pin	617224001	282281 M22520/2-01	282971 M22520/2-08	4	282522001 (M81969/39-01)	Plastic
		24	Socket	617324001			3		
		26					3		
	Oversize Crimp Barrel	18	Pin	617221200	282281 M22520/2-01	282971 M22520/2-08	5		
		20	Socket	617320200			5		
		22					4		
16	Reduced Crimp Barrel	20	Pin	617241	282291 M22520/1-01	282972 M22520/1-02	5	282515 (M81969/14-03)	Plastic
		22	Socket	617341			5		
		24					4		
	Reduced Crimp Barrel for Optical Electrical Cavity	20	Pin	617235002 [1]	282291 M22520/1-01	282581013	5		
		22					5		
		24					4		
	Oversize Crimp Barrel	14	Pin	617240200	282291 M22520/1-01	282972 M22520/1-02	6		
		16	Socket	617340200			5		
		18					5		

Notes

1. Electrical contacts for optical inserts are always pin contacts (hermaphrodite).

Contacts

COAXIAL CRIMP CONTACTS

CONTACT SIZE	CABLE TYPE	TYPE	ENVIRONMENTAL PART NUMBER	NON-ENVIRONMENTAL PART NUMBER	INS/EXT TOOL	MATERIAL OF TOOL
15-16	RG188 FILECAF1709/6 F1709/8 RG174-RG179-RG316 ASNE0639XY 75 Ohms	Pin	617130		282512 (M81969/14-03)	Metal
		Socket	617030			
	RG178	Pin	617131			
		Socket	617031			
	GORE/AXON P812817 FILECA F1703-134 FILOTEX SP132868	Pin	617132			
		Socket	617032			
	RG178 DT	Pin	617133			
		Socket	617033			
	UT .047	Pin	617135			
		Socket	617035			
12	UT.085-RG405	Pin	617160		282549004 (M81969/14-04)	Plastic
		Socket	617060			
5	RG58-RG141	Pin	617101001	617101	282946 (M81969/28-01)	Metal
		Socket	617001001	617001		
	RG142 - RG400	Pin	617102001	617102		
		Socket	617002001	617002		
	RG174-RG316-RG188-RG178DS NEXAN 10036442 75 Ohms	Pin	617103001	617103		
		Socket	617003001	617003		
	RG178-RG196	Pin	617104001	617104		
		Socket	617004001	617004		
	RG180 PAN6422XZ ANSE063WGH 96 Ohms	Pin	617105001	617105		
		Socket	617005001	617005		

Contacts

TWINAX & TRIAX CRIMP CONTACTS

CONTACT SIZE	CABLE TYPE	TYPE	ENVIRONMENTAL PART NUMBER	NON-ENVIRONMENTAL PART NUMBER	INS/EXT TOOL	MATERIAL OF TOOL
12 Triax	ECS0700	Pin	617190010		282549004 (M81969/14-04)	Plastic
		Socket	617090010			
	M17/176-00002	Pin	617190012			
		Socket	617090012			
8 Triax	TENSOLITE 24463/9PO25X-2 100 Ohms	Pin	617165021	617165020	282549001	Metal
		Socket	617065021	617065020		
	WHITMOR W2675-1575	Pin	617165	617165001		
		Socket	617065	617065001		
8 Twinax	ABS0386WF24 & TYCO 1726A1424A	Pin	617165011	620165010	282549001	Metal
		Socket	617065011	620065010		
5 Triax	PAN6421ZA002 77 Ohms M17/176-00002 EN3375-003 Raychem 106113 77 Ohms	Pin	617150001	617150	282946 (M81969/28-01)	Metal
		Socket	617050001	617050		
	TENSOLITE 24473/03159X 124 Ohms	Pin	617152001	617152		
		Socket	617052001	617052		

Contacts

QUADRAX & BMA CRIMP CONTACTS

QUADRAX CONTACTS

The Quadrax contact offer is compliant with Arinc 600 and EN3155-072 and EN3155-073 standards.

ENVIRONMENTAL QUADRAX

CONTACT SIZE	CABLE TYPE	TYPE	ENVIRONMENTAL PART NUMBER	EXTRACTION TOOL IN METAL
8	Ethernet Cable ABS0972 and ABS1503	Pin	617175011	282549001
		Socket	617075011	
	TENSOLITE NF24Q100	Pin	617175051	
		Socket	617075051	
	TENSOLITE NF26Q100/JSF Y18	Pin	617175053	
		Socket	617075053	
	TENSOLITE NF22Q100	Pin	617175041	
		Socket	617075041	

NON-ENVIRONMENTAL QUADRAX

CONTACT SIZE	CABLE TYPE	TYPE	NON-ENVIROMNMENTAL PART NUMBER	COMPATIBLE SEALING BOOT PART NUMBER	EXTRACTION TOOL IN METAL
8	Ethernet Cable ABS0972 and ABS1503	Pin	617175012	617939003	282549001
		Socket	620075010		
	TENSOLITE NF24Q100	Pin	617175052		
		Socket	620075050		
	TENSOLITE NF26Q100/JSF Y18	Pin	617175054	617939005	
		Socket	620075021		
	TENSOLITE NF22Q100	Pin	617175040	617939003	
		Socket	620075040		

BMA CONTACTS

Extraction tool **282549001** is used for size 8 BMA contacts.
Environmental BMA contacts are all provided with sealing boots.

CONTACT SIZE	CABLE TYPE	CONNECTOR TYPE	ENVIRONMENTAL PART NUMBER	NON-ENVIRONMENTAL PART NUMBER	FREQUENCY RANGE	MAX VSWR	INSERTION LOSS
8	SHF5 - SHF5M [1]	Pin	617171011	617171010	DC-18 GHz	1.35	0.13 dB at Max Frequency (18 GHz)
	RG142	Pin	617171021	617171020	DC-12.4 GHz	1.35	0.11 dB at Max Frequency (12.4 GHz)
	SHF2.4M [1]/UT.085/ Harbour SS405/ Times Tflex405	Pin	617171031	617171030	DC-18 GHz	1.35	0.13 dB at Max Frequency (18 GHz)
	SHF5 - SHF5M [1]	Socket	617071011	617071010	DC-18 GHz	1.35	0.13 dB at Max Frequency (18 GHz)
	RG142	Socket	617071021	617071020	DC-12.4 GHz	1.35	0.11 dB at Max Frequency (12.4 GHz)
	SHF3 [1]	Socket	617071041	617071040	DC-18 GHz	1.35	0.13 dB at Max Frequency (18 GHz)

Notes

1. BMA contacts which can accommodate SHF cables require a termination by Radiall.

Contacts

LUXCIS® FIBER OPTIC CONTACTS

The LuxCis® product range is a proven, flexible fiber optic interconnect solution offering high-speed communication in aerospace and other harsh environments.

OPTICAL PERFORMANCE

	MULTIMODE (PC) 850/1300 Nm	SINGLEMODE (UPC) 1310/1550 Nm
Insertion Loss (IL) Mean (IEC 61300-3-4 Method B)	0.1 dB	0.15 dB
Return Loss (RL) (IEC 61300-3-6)	> 20 dB	> 50 dB

MECHANICAL & ENVIRONMENTAL CHARACTERISTICS

	STANDARD	PERFORMANCE
Thermal Cycling	SAE AS 13441 Method 1003.1	-55 °C/+125 °C (Cable Dependant)
Temperature Endurance	TIA/EIA 455-4	1,000 h at 125 °C (Cable Dependant)
Vibration	TIA/EIA 455-11	27 g
Shock	TIA/EIA 455-14	50 g, 11 ms
Durability	TIA/EIA 364-09	500 Cycles [1]
Maintenance	SAE AS 13441 Method 2002.1	10 Cycles
Cable Retention 1.8 mm Diameter 900 µm Diameter	SAE AS 13441 Method 2009.1	68 N 7 N
Humidity	TIA/EIA 455-5	10 Cycles/24 h 90% RH -25 °C/+65 °C

LUXCIS® CONTACT PART NUMBERING SYSTEM

F7250

LUXCIS® SERIES

FERRULE TYPE
00: PC ferrule for single-mode fiber
03: PC ferrule for 50/125 or 62.5/125 µm multi-mode fiber
04: PC ferrule for 100/40 um multi-mode fiber
05: PC ferrule for 200/230 um multi-mode fiber
50: APC ferrule for single-mode fiber

CABLE TYPE AND DIAMETER
118: 900 µm cable
318: 1.2 mm cable with strengthening members, tight structure
419: 1.6 to 2.2 mm cable, loose structure
519: 1.6 to 2.2 mm cable, tight structure

The sealing plug F718 211 200 is specifically designed to fill the unused LuxCis® Arinc 801 cavities.

Notes
1. Mating cycles are dependant on the connector series.
Radiall can support you with your cable and harness assemblies.
Please contact your sales representative.

Contacts

SIGNAL PC TAIL CONTACTS

Selection Table for Straight PC Tail Contacts

Contact termination designations are a combination of 2 letters:

- The first letter characterizes the contact plating
  R = Pure-tin (RoHS); Z = Tin lead; Y = Gold
- The second letter characterizes the length of the PC tail: A to D
  The exact lengths can be found on the assembly kit sections

CONTACT TERMINATION	CONTACT TYPE	SIZE 22	SIZE 20	SIZE 16	SIZE 12	SIZE 8	SIZE 5
RA	Pin	617205510	617222514	617242510	617259505	617291501	617289506
	Socket	617305500	617322505	617342510	617359505	617391501	617389506
YA	Pin	617205010	617222014	617242010	617259005	617291001	617289006
	Socket	617305	617322005	617342010	617359005	617391001	617389006
ZA	Pin	617205710	617222714	617242710	617259705	617291701	617289706
	Socket	617305700	617322705	617342710	617359705	617391701	617389706
RB	Pin	617205501	617222512	617242508	617259506	617291503	617289504
	Socket	617305501	617322506	617342511	617359506	617391503	617389504
YB	Pin	617205001	617222012	617242008	617259006	617291003	617289004
	Socket	617305001	617322006	617342011	617359006	617391003	617389004
ZB	Pin	617205701	617222712	617242708	617259706	617291703	617289704
	Socket	617305701	617322706	617342711	617359706	617391703	617389704
RC	Pin	617205515	617222513	617242517	617259503	617291504	617289503
	Socket	617305508	617322507	617342513	617359503	617391504	617389503
YC	Pin	617205015	617222013	617242017	617259003	617291004	617289003
	Socket	617305008	617322007	617342013	617359003	617391004	617389003
ZC	Pin	617205715	617222713	617242717	617259703	617291704	617289703
	Socket	617305708	617322707	617342713	617359703	617391704	617389703
RD	Pin	617205509	617222510	617242509	617259507	617291505	617289507
	Socket	617305502	617322509	617342515	617359507	617391505	617389507
YD	Pin	617205009	617222010	617242009	617259007	617291005	617289007
	Socket	617305002	617322009	617342015	617359007	617391005	617389007
ZD	Pin	617205709	617222710	617242709	617259707	617291705	617289707
	Socket	617305702	617322709	617342715	617359707	617391705	617389707
Ins/Ext. Tool		282522 M81969/14-01	282522001 M81969/39-01	282515 M81969/14-03	282549004 M81969/14-04	282549001 M81969/28-03	282946 M81969/28-01

Contacts

QUADRAX SIZE 8 PC TAIL CONTACTS

Selection Table for Straight PC Tail Contacts

Contact termination designations are a combination of 2 letters:

- The first letter characterizes the contact plating
  R = Pure-tin (RoHS); Z = Tin lead; Y = Gold
- The second letter characterizes the length: A to D. The exact dimensions of the lengths can be found on the assembly kit sections

CONTACT TERMINATION	CONTACT TYPE	PART NUMBERS
RA	Pin	617177512
	Socket	617077512
YA	Pin	617177012
	Socket	617077012
ZA	Pin	617177712
	Socket	617077712
RB	Pin	617177501
	Socket	617077502
YB	Pin	617177001
	Socket	617077002
ZB	Pin	617177701
	Socket	617077702
RC	Pin	617177508
	Socket	617077508
YC	Pin	617177008
	Socket	617077008
ZC	Pin	617177708
	Socket	617077708
RD	Pin	617177513
	Socket	617077513
YD	Pin	617177013
	Socket	617077013
ZD	Pin	617177713
	Socket	617077713
Ext. Tool		282549001

Contacts

FILLER PLUGS

Filler plugs are dedicated to non-environmental insert cavities. The arrows show the direction which you have to insert the plug.

SIZE	CONTACT CAVITY VERSION	INS/EXT	COLOR	PART NUMBER	DRAWING
22	For Pin & Socket	Rear/Rear	Black	620920	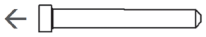
20			White	610941	
16 For Electrical Cavity			Blue	620922	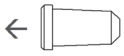
16 For Optical Cavity			Green	F718211200	
12			Yellow	620923	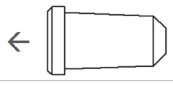
8	Pin		Nickel	619953	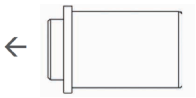
	Socket			619950	
5	Pin		White	617930	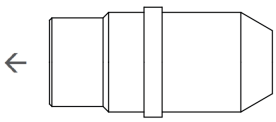
	Socket			617931	

SEALING PLUGS

Sealing plugs are dedicated to environmental insert cavities.

SIZE	CONTACT CAVITY VERSION	INS/EXT	COLOR	PART NUMBER	DRAWING
22	For Pin & Socket	Rear/ Rear	Black	616910	
20			Red	616911	
16 For Electrical Cavity			Green	616912	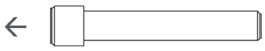
16 For Optical Cavity				F718211200	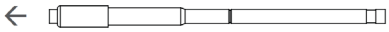
12			Orange	616913	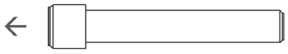
8			Red	618915	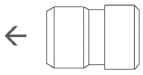
5				616914013	

Disconnect Application

EPXA1 PRODUCT OVERVIEW

Detailed view of receptacle and plug with accessories for the EPXA1 connector:

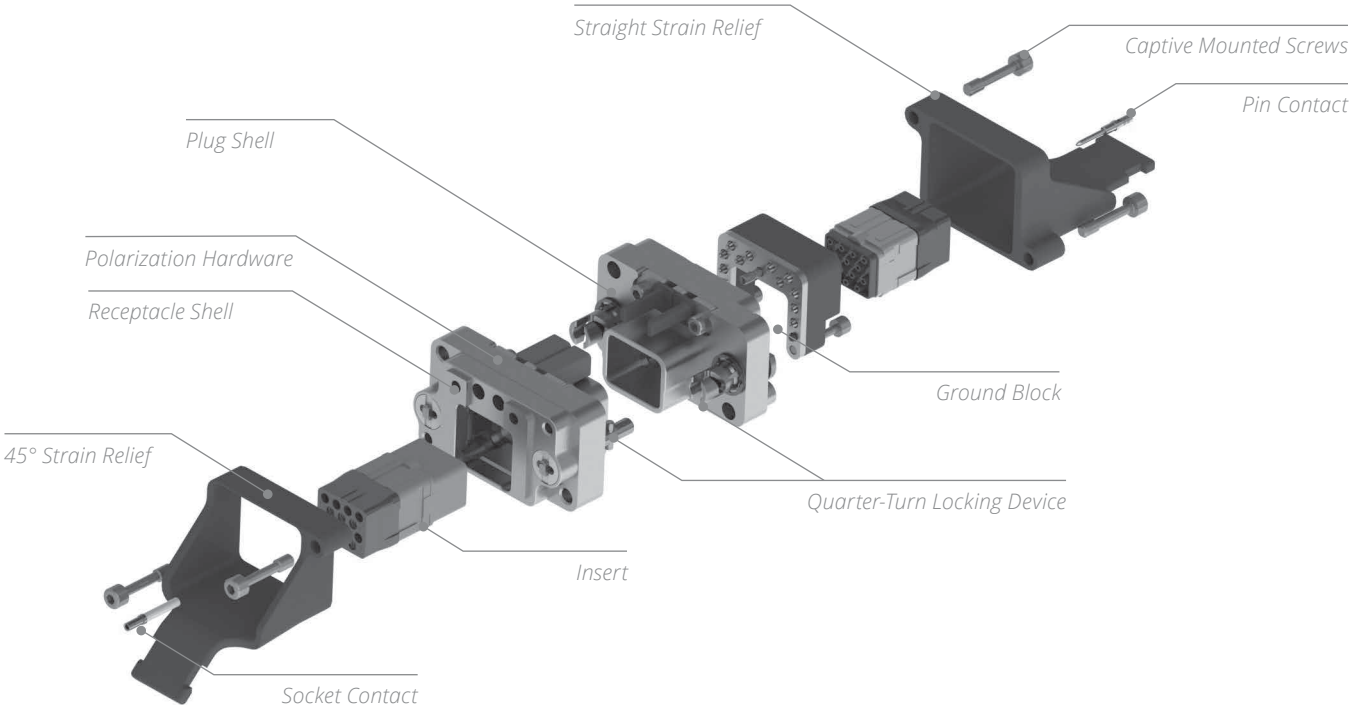

Disconnect Application

EPXB1 PRODUCT OVERVIEW

Detailed view of receptacle and plug with accessories for the EPXB1 connector:

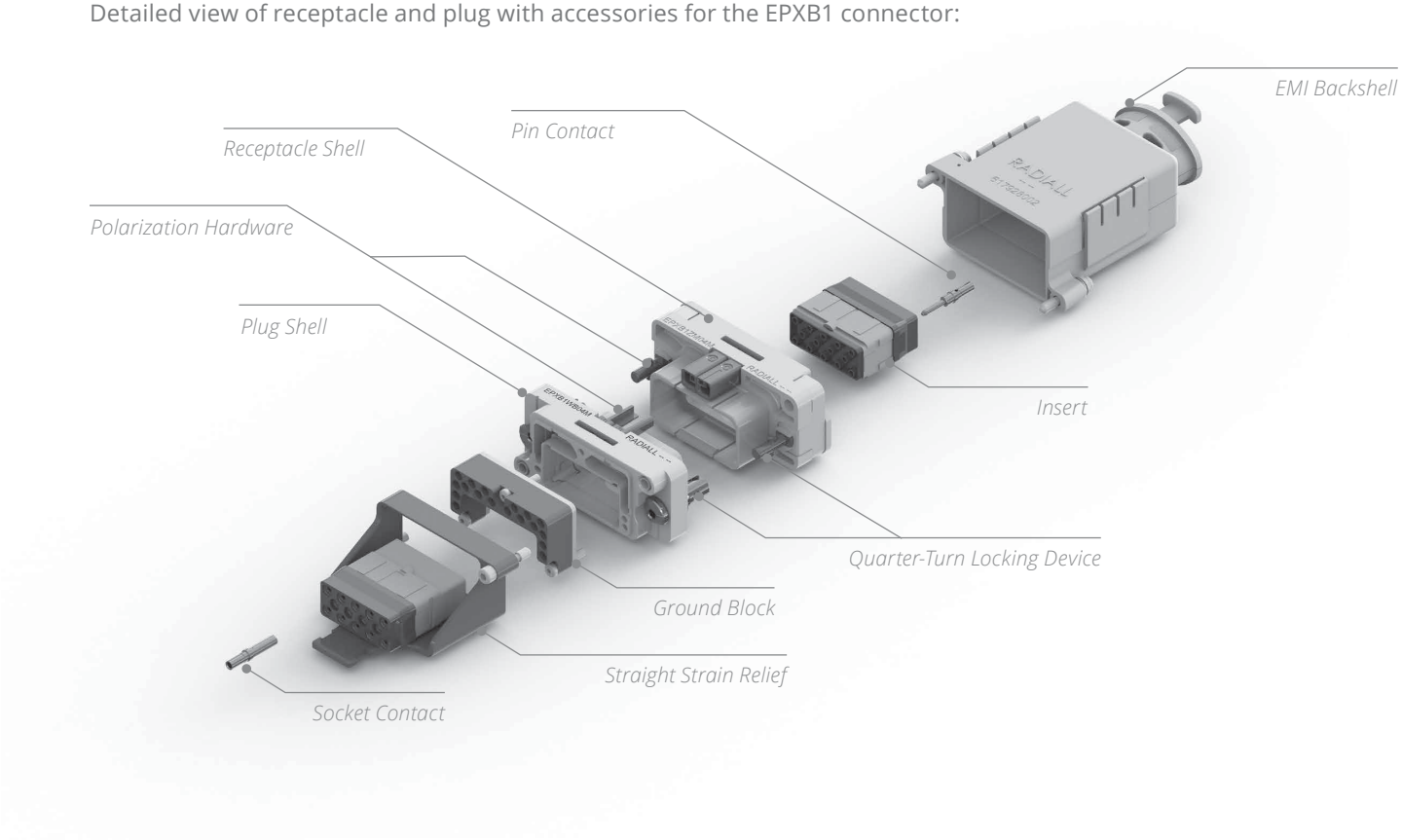

Disconnect Application

HOW TO ORDER EPXA1 & EPXB1 SHELL

EPX

SERIES PREFIX

SHELL SIZE
A1: Single small cavity shell
B1: Single large cavity shell

SHELL STYLE
P: Plug
R: Receptacle
W: Plug with ground block
Z: Receptacle with ground block

SHELL MOUNTING OPTION [1]
B: Plug without mounting holes
M: Receptacle with two mounting holes, 6-32 UNC for rear panel [2]

LOCKING DEVICE
0: Quarter-turn fastener

POLARIZATION CODE [3]
4: Shell delivered with polarizing hardware unassembled
5: Shell delivered with no polarizing hardware

SHELL CLASS
M: Nickel-plated composite for EPXB1
K: Nickel-plated aluminium for EPXB1 (mateable with version M composite shell)
N: Nickel-plated aluminium for EPXA1

GROUND BLOCK

Radiall provides a unique patented feature by integrating a ground block directly on the shell. This option permits very short ground terminations.

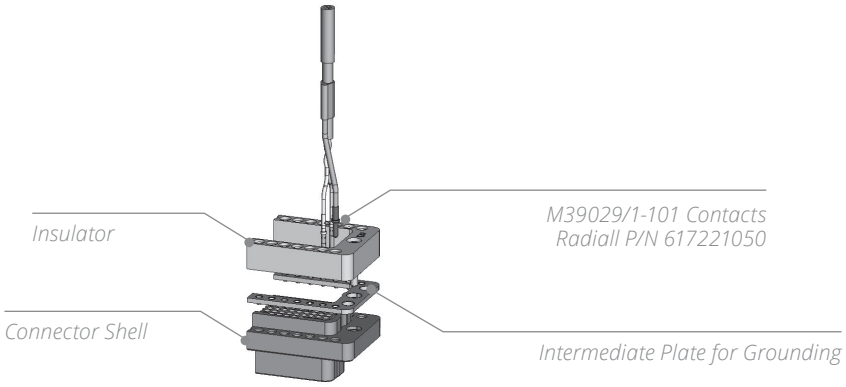

Notes
1. Recommended locking torque: 1.6 Nm (14.16 in.-lb) for metallic shell and 1.1 Nm (9.73 in.-lb) max for composite shell.
2. Self-locking mounting holes are designed for rear panel mounting.
3. Please see page 1-28 on how to use the polarization device.

Disconnect Application

HOW TO ORDER EPXA & EPXB1 ASSEMBLY KIT

Assembly kit is delivered fully assembled including shell with insert mounted, with or without contacts, according to the selection.

Tips to help you in your selection:

- You are free to use either pin or socket inserts in EPXA and EPXB1 plug or receptacles.
- Crimp contacts can be delivered with a kit; check which contacts would be included on page 1-10.
- If PC tail are selected, then all cavities including signal, power and quadrax are populated. Size 5 coax cavities are not populated.
- If PC tail contacts are needed, remember that they are available as pin straight PC tail contacts in receptacles only.

SHELL SELECTION PART

EPX

SERIES PREFIX

SHELL SIZE
A1: Single small cavity shell
B1: Single large cavity shell

SHELL STYLE
P: Plug
R: Receptacle
W: Plug with ground block
Z: Receptacle with ground block

POLARIZATION CODE
4: Shell delivered with polarizing hardware unassembled
5: Shell delivered with no polarizing hardware

SHELL CLASS
M: Nickel-plated composite for EPXB1
K: Nickel-plated aluminium for EPXB1 (mateable with version M composite shell)
N: Nickel-plated aluminium for EPXA

INSERT SELECTION PART

INSERT CLASS
E: Environmental
N: Non-environmental (no rear grommet, no interfacial seal)
H: Non-environmental insert with a rear grommet, available for pin insert only (recommended for crimp contact)
T: Non-environmental insert with an interfacial seal, available for pin insert only (recommended for PC tail contact)

INSERT CODE
Refer to page 1-10 to select insert code

CONTACTS TERMINATION
XS: Socket insert without contacts [1]
XP: Pin insert without contacts [1]
SS: Socket insert with crimp contacts [1]
SP: Pin insert with crimp contacts [1]

YA: Gold PC tail contacts length A [2]
ZA: Tin-lead PC tail contacts length A [2]
RA: Pure tin (RoHS) PC tail contacts length A [2]

Notes

1. These contacts are delivered uninstalled
2. Refer to page 1-29 to select PC tail contacts for receptacle

Disconnect Application

POLARIZATION CODE FOR EPXA1 & B1

Caution: Read the polarization code from left to right, the same way the part number marking can be read on the connector.

	PLUG	RECEPTACLE
EPXA1	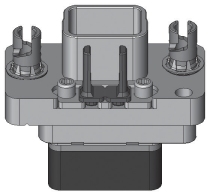	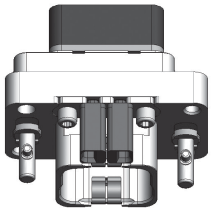
EPXB1	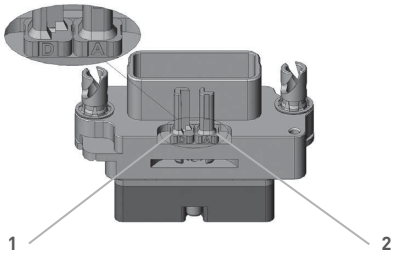	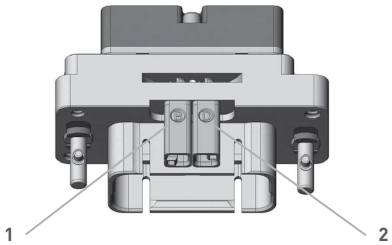
Coding Device	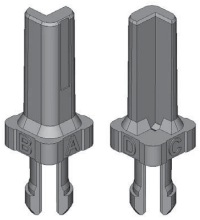 View A and B View C and D	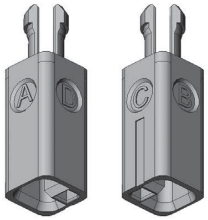 View A and D View C and B

There are 16 possible codings:

KEY POSITION 1	A	A	A	A	B	B	B	B	C	C	C	C	D	D	D	D
KEY POSITION 2	A	B	C	D	A	B	C	D	A	B	C	D	A	B	C	D

Disconnect Application

CONTACT TERMINATION FOR EPXB1

Aluminium and composite shell versions.

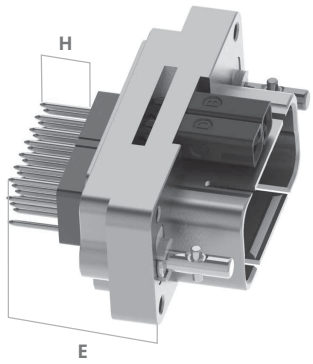

STRAIGHT PC TAIL CONTACT TERMINATION

MIN LENGTH E MM (INCH)	MIN LENGTH H MM (INCH)	GOLD	TIN-LEAD	PURE TIN (ROHS)
16.20 (0.637) [1]	-	YA	ZA	RA
19.40 (0.763) [1]	-	YB	ZB	RB
21.25 (0.836) [1]	-	YC	ZC	RC
25.20 (0.992)	5.40 (0.212)	YD	ZD	RD

Notes

1. These PC tail lengths are not compatible with EPXBE and EPXBH inserts.

Disconnect Application

EPXA1 SHELL DIMENSIONS

WITHOUT GROUND BLOCK

Receptacle *Plug*

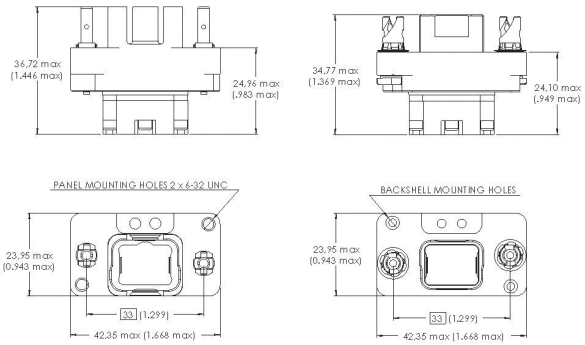

WITHOUT GROUND BLOCK

Receptacle *Plug*

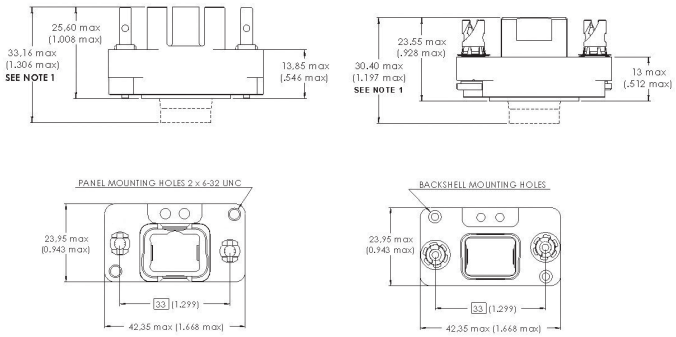

SINGLE PANEL CUT-OUT [2]

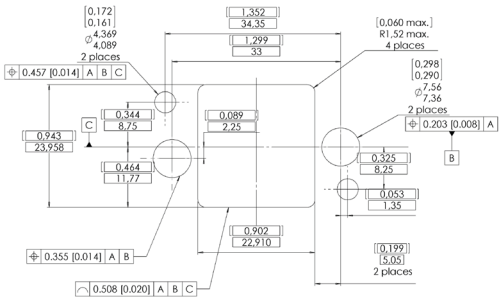

MULTIPLE PANEL CUT-OUT [2]

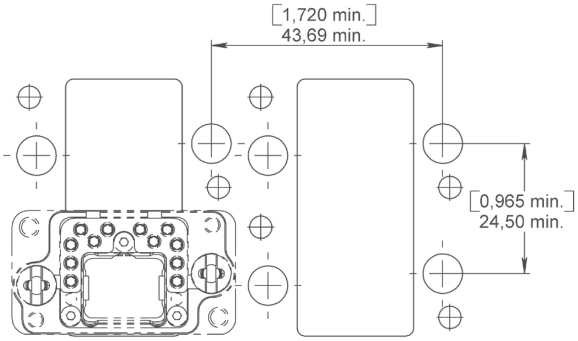

EPXA1 SHELL WEIGHTS

Weights include the shell with polarization hardware.

EPXA1	SHELL STYLE	WEIGHT
CLASS N	P	27.0 g (0.95 oz)
	R	33.0 g (1.16 oz)
	W	35.0 g (1.23 oz)
	Z	41.0 g (1.45 oz)

Notes

1. Maximum dimension for insert with grommets.
For insert without grommet maximum dimensions will be for receptacle 25.55 mm (1.006 in.) and for the plug 23.52 mm (0.926 in.).
2. Rear mounting side view with key post oriented to the upper side.

Disconnect Application

EPXB1 SHELL DIMENSIONS

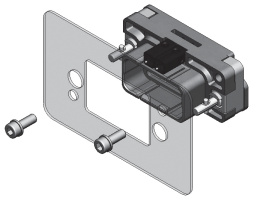

WITHOUT GROUND BLOCK

Receptacle *Plug*

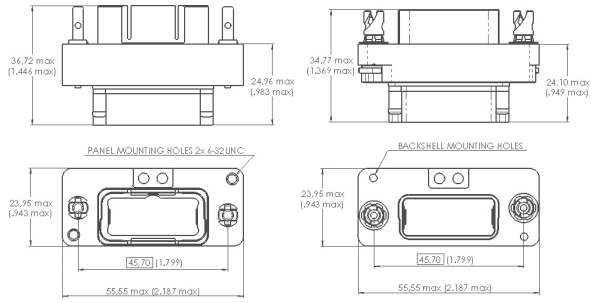

WITHOUT GROUND BLOCK

Receptacle *Plug*

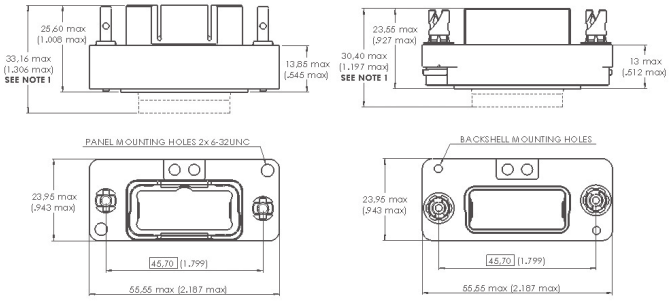

SINGLE PANEL CUT-OUT [2]

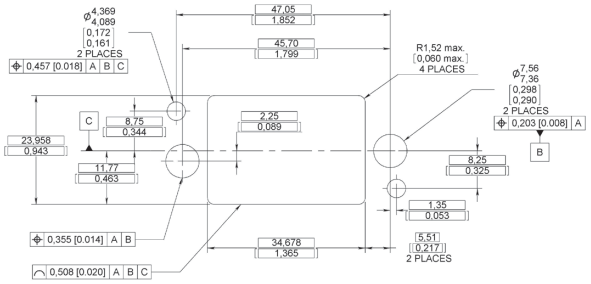

MULTIPLE PANEL CUT-OUT [2]

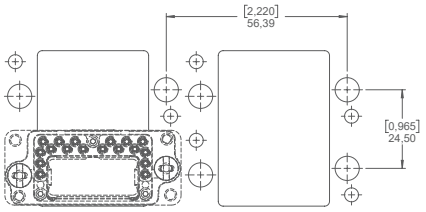

EPXB1 SHELL WEIGHTS

Weights include the shell with polarization hardware.

EPXB1	SHELL STYLE	WEIGHT
CLASS K	P	27.0 g (0.95 oz)
	R	33.0 g (1.16 oz)
	W	37.0 g (1.31 oz)
	Z	43.0 g (1.52 oz)
CLASS M	P	25.0 g (0.88 oz)
	R	33.0 g (1.16 oz)
	W	35.0 g (1.23 oz)
	Z	43.0 g (1.52 oz)

Notes

1. Maximum dimension for insert with grommet. For insert without grommet: Insert is flush to the shell. Maximum dimension for the receptacle is 25.55 mm (1.006 in.) and for the plug is 23.52 mm (0.926 in.). For insert with optical contacts: the maximum dimension for the receptacle is 38.70 mm (1.524 in.) and the plug is 36.00 mm (1.418 in.).

2. Rear mounting side view with polarization hardware oriented to the upper side.

Disconnect Application

EPXA1 & EPXB1 SPARE PARTS

SPARE PARTS & DUST CAPS

	PART NUMBER		DESCRIPTION
	EPXA	EPXB1	
	617980032	-	Polarization Kit for Plug Connector
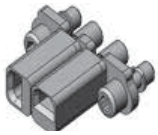	617980033	-	Polarization Kit for Receptacle Connector
	-	617980030	Polarization Post
	-	617980031	Polarization Key
	617954006	617954008	Dust Cap for Plug Shell (Pink Color)
	617954007	617954009	Dust Cap for Receptacle Shell (Pink Color)
	617954044	617954034	ESD Dust Cap for Plug Shell (Black Color)
	617954045	617954028	ESD Dust Cap for Receptacle Shell (Black Color)
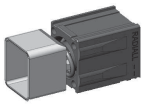	617929033	-	Sealing Inserts for Fly Away Applications: Mateable with Pin Insert
	-	617929023	
	617929032	-	Sealing Inserts for Fly Away Applications: Mateable with Socket Insert
	-	617929022	

Disconnect Application

EPXA1 & EPXB1 ACCESSORIES

STRAIN RELIEFS & EMI BACKSHELLS

	PART NUMBER		DESCRIPTION
	EPXA1	EPXB1	
	617921030	617921029	Straight Strain Relief (Composite)
	617921032	617921031	45° Strain Relief (Composite)
	-	617924016	Straight EMI Backshell (Nickel-Plated Aluminium)
	-	617928002	Straight EMI Backshell (Nickel-Plated Composite)
	-	617921044	Fiber Optic Backshell (Composite)

Notes

For mounting instructions, please contact Radiall.

Disconnect Application

EPXB2 CONNECTORS

Radiall's EPXB2 disconnect connectors have been widely used in the aerospace industry for more than 10 years. Meant to be used in cable-to-cable and PCB-to-cable applications, EPXB2 connectors exceed civil aerospace market expectations in terms of high density, quick installation, and cost and weight savings.

Standardized by EN4644 European standard, Radiall's EPX® has been recognized as the leading rectangular modular connector and used in major commercial and business jet aircrafts. EPXB2 connectors are designed to cover any applications including:

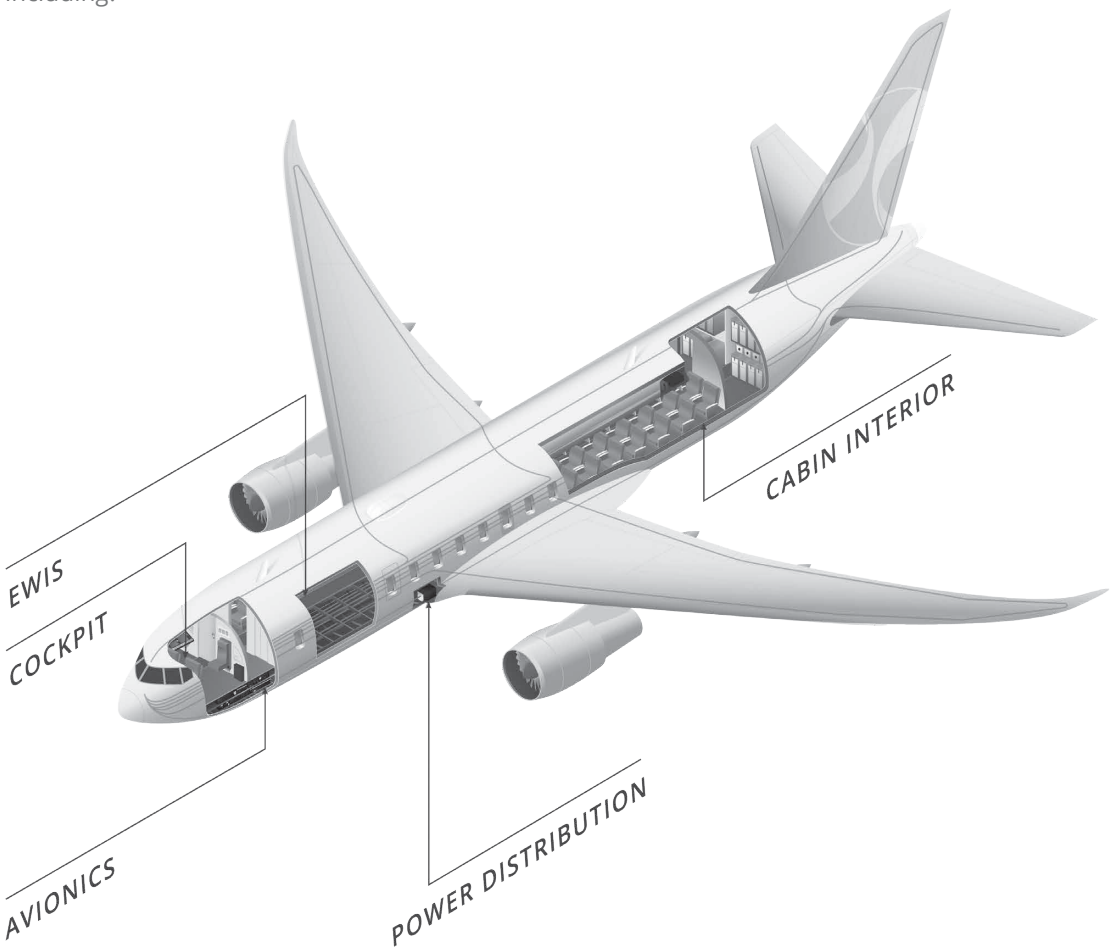

EWIS
EPXB2 provides easy maintenance and high reliability, which are key characteristics of EWIS environments.

CABIN INTERIOR
EPXB2 combines high speed data with space savings to serve the latest generations of cabin systems.

COCKPIT
EPXB2 offers simplified and intuitive installation for Fiber Optic and signal connections that are critical in cockpit design.

AVIONICS
EPXB2's compactness, weight and robust design efficiently support avionics systems needs.

POWER DISTRIBUTION
EPXB2's stackable and segregated features make it the perfect solution for power distribution.

EPXB2 PRODUCT OVERVIEW

Detailed view of receptacle and plug with accessories for the EPXB2 disconnect connector:

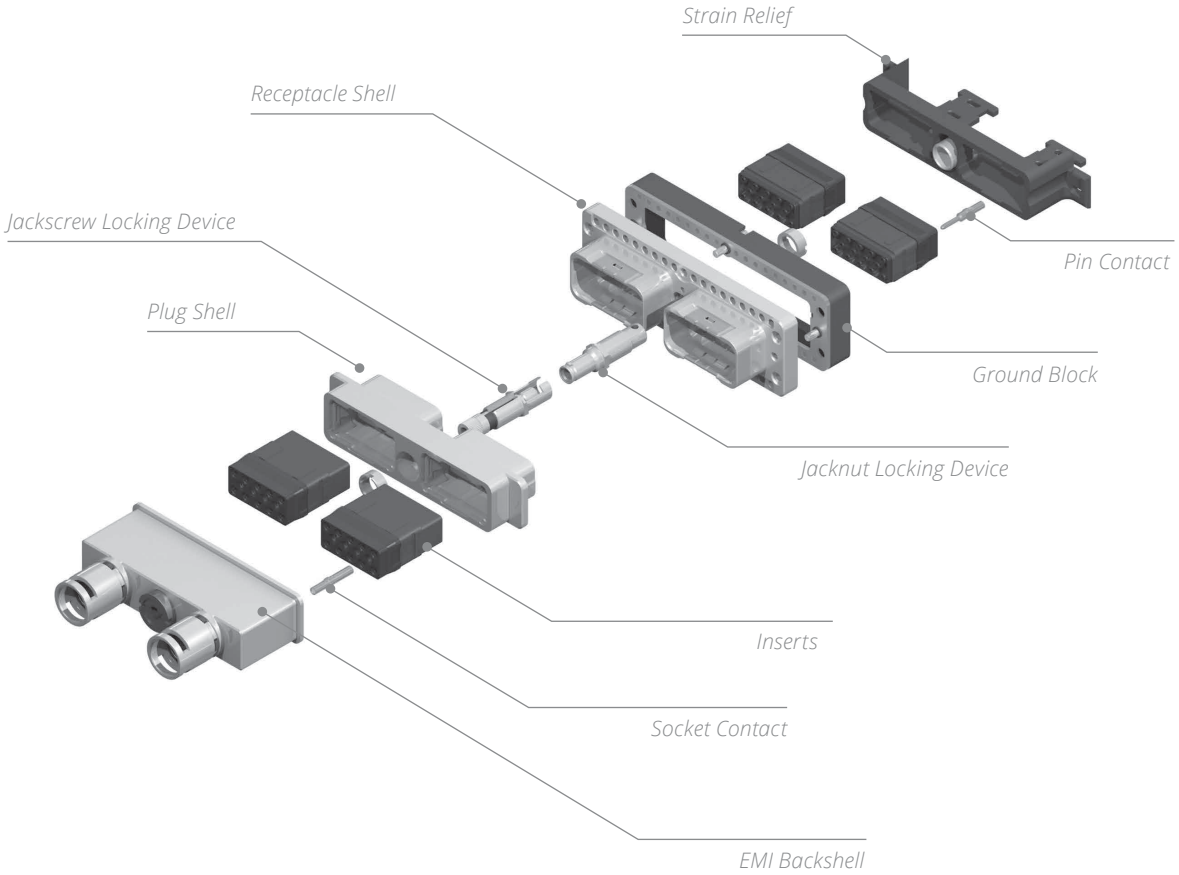

Disconnect Application

EPXB2 RANGE OVERVIEW

Modular and flexible, EPXB2 answers all disconnect connecting needs with the use of a limited number of components. With a large variety of shells and one range of inserts, contacts and accessories, EPXB2 range is completely expandable and fits to your exact needs. You can mix and match solutions to build your connector with:

SHELL CLASSES - (ALL NICKEL-PLATED)

N	M	J
Aluminium	*Composite*	*Weight Optimized Aluminium*

SHELL STYLES

Defining connector types (plug or receptacle) and their key features.

Classic EPXB2	Ground Block	Flange	Bulkhead	iEPX

EPXB2 GALAXY

Plugs

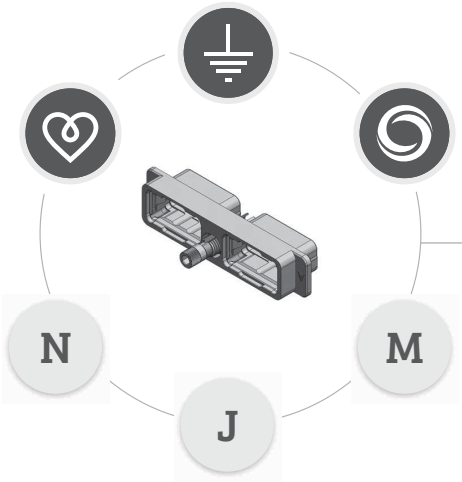

Receptacles

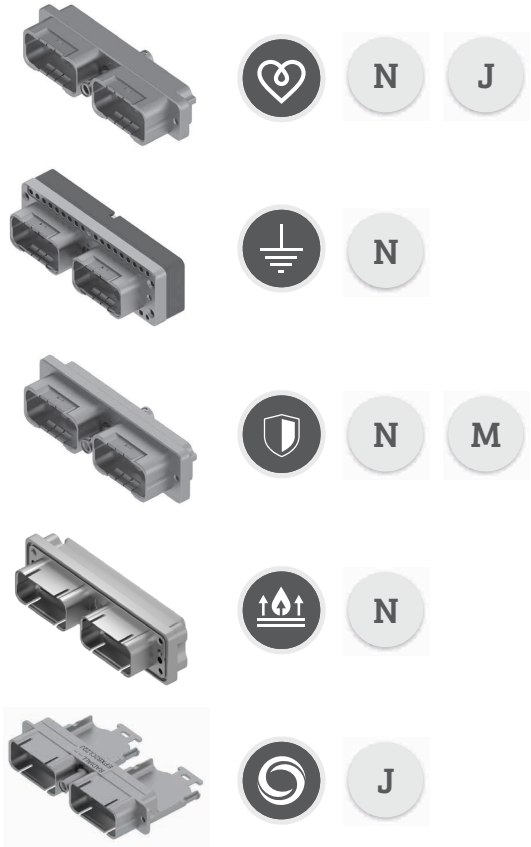

Disconnect Application

EPXB2 LATEST INNOVATIONS

iEPX

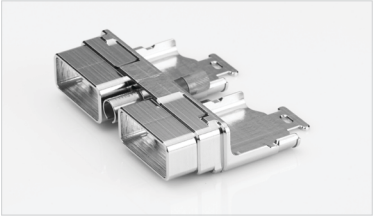

Radiall expands the EPX® series by offering iEPX, a new weight optimized EPXB2 shell designed to be used in disconnect panel applications. With an integrated strain relief and EMI backshell to press-in, iEPX provides EMI shielding while reducing cost and weight.

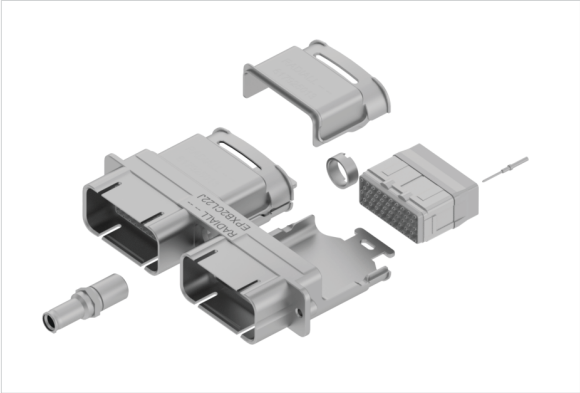

FEATURES & BENEFITS:

- Quick and easy to terminate
- Lightweight
- Prevents FOD
- Cable-to-cable connection
- Integrated strain relief

MIX & MATCH:

- Fully intermateable with all EPXB2 plugs and receptacles.
- Modular and comprehensive range: iEPX uses all contacts and inserts from EPX® range.

EPX® BULKHEAD

Radiall's EPXB2 Bulkhead receptacle is a perfect solution for disconnect panel sealing applications. Combining EPX® proven technology with Bulkhead functionality, EPXB2 Bulkhead modular connectors provide effective panel sealing with a user friendly and cost saving approach.

With EPXB Bulkhead pin insert range, Bulkhead receptacle provides permanent sealing between two zones with different environmental conditions.

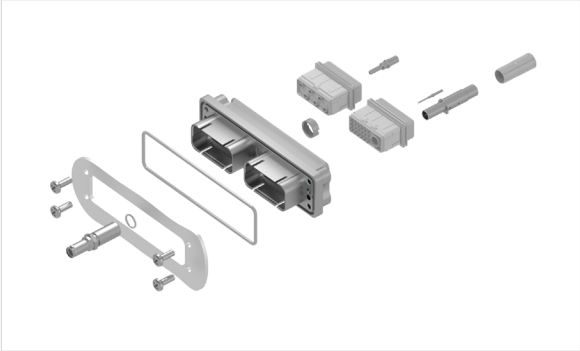

FEATURES & BENEFITS:

- Modular
- Competitive offer
- Optimized and mature design
- Easy and economical integration in the BOM
- PCB-to-cable or cable-to-cable connection

MIX & MATCH:

- Fully intermateable with all EPXB2 plugs
- Uses EPX® broad range of accessories and contacts including signal, power, quadrax and fiber optics

Disconnect Application

HOW TO ORDER EPXB2 SHELL

EPX

SERIES PREFIX

SHELL SIZE
B2: Two cavity shell

SHELL STYLE
For option compatibility, see the table below.
L: Receptacle with flange
H: Classic receptacle
Z: Receptacle with ground block
R: Receptacle without ground fingers
C: iEPX receptacle with integrated strain-relief
P: Classic plug
W: Plug with ground block
D: iEPX plug with integrated strain-relief

SHELL PLATING
N: Nickel-plated aluminium
M: Nickel-plated composite
J: Nickel-plated, weight-optimized aluminium

POLARIZATION CODE [2]
2: Polarizing device A to F delivered unassembled
3: Polarizing device N to Z delivered unassembled

LOCKING & POLARIZATION DEVICE [1]
1: Jackscrew
2: Jacknut
3: Without locking device

SHELL MOUNTING
A: Panel rear mounted connector with 4 × 6-32 mounting holes
B: No mounting holes
D: Connector with 2 × Ø 3.10 mm thru holes
F: Panel rear mounted connector with 2 × 6-32 mounting holes
L: Panel rear mounted connector with 2 × 4-40 mounting holes

AVAILABLE SHELL MOUNTING

	SHELL STYLE	A *(4 × 6.32 UNC)*	B *(no holes)*	D *(2 × Ø 3.10 mm)*	F *(2 × 6.32 UNC)*	L *(2 × 4.40 UNC)*
Class N *(Aluminium)*	L	-	-	✓	✓	✓
	H	-	✓	✓	✓	✓
	Z	✓	✓	-	-	-
	R	✓	-	-	-	-
	P	-	✓	✓	-	✓
	W	✓	✓	-	-	-
	B	✓		-	-	-
Class J *(Weight-Optimized Aluminium)*	H	-	-	-	-	✓
	C	-	-	-	-	✓
	P	-	✓	-	-	-
	D	-	✓	-	-	-
Class M *(Composite)*	L	-	-	✓	-	✓
	P	-	✓	✓	-	✓

Notes
1. Jackscrew/Jacknut can be mounted on either plug or receptacle shell. However, the standard options are:
- Jackscrew for plug shells
- Jacknut for receptacle shells
2. Please see page 1-40 for how to use the the polarization coding.

Disconnect Application

HOW TO ORDER EPXB2 ASSEMBLY KIT

Assembly kits are delivered fully assembled including shell with inserts mounted, with or without contacts, according to the selection. When selecting your insert codes, do not forget to place them in the order you want them assembled. Locking and polarizing devices are delivered uninstalled.

Tips to help you in your selection:

- You are free to use either pin or socket inserts in EPXB plug or receptacle.
- Crimp contacts can be delivered with a kit. Check which contacts will be included on page 1-10.
- PC tail contacts can also be delivered with a kit. Remember that only straight pin PC tail contacts are available, and in receptacle only.
- If PC tail contacts are selected, then all cavities including signal, power and quadrax are populated. Size 5 coax cavities are not populated.

All connector inserts will use the same insert class and the same contact termination.

EPX

SHELL SELECTION PART

SERIES PREFIX

SHELL SIZE
B2: Two cavity shell

SHELL STYLE
For option compatibly, see table on page 1-38
L: Receptacle with flange
H: Classic receptacle
Z: Receptacle with ground block
R: Receptacle without ground fingers
B: Bulkhead receptacle (bulkhead pin inserts compulsory)
C: iEPX receptacle with integrated strain-relief
P: Classic plug
W: Plug with ground block
D: iEPX plug with integrated strain-relief

SHELL MOUNTING
A: Rear panel mounted connector with 4 × 6-32 mounting holes
B: No mounting holes
D: Connector with 2 × Ø 3.10 mm thru holes
F: Rear panel mounted connector with 2 × 6-32 mounting holes
L: Rear panel mounted connector with 2 × 4-40 mounting holes

POLARIZATION
1: Jackscrew polarizing device A to F
2: Jacknut polarizing device A to F
3: Without locking device
6: Jackscrew polarizing device N to Z
7: Jacknut polarizing device N to Z

SHELL CLASS
N: Nickel-plated aluminium
M: Nickel-plated composite
J: Nickel-plated, weight-optimized aluminium

INSERT SELECTION PART

CONTACTS TERMINATION
XS: Socket insert without contacts
XP: Pin insert without contacts
SS: Socket insert with crimp contacts [1]
SP: Pin insert with crimp contacts [1]
YA: Gold PC tail contacts length A [2] [3]
ZA: Tin-lead PC tail contacts length A [2] [3]
RA: Pure tin (RoHS) PC tail contacts length A [2] [3]

INSERT CODE
Refer to page 1-12 to select insert code

INSERT CLASS
B: Bulkhead insert with interfacial seal and rear grommet, available for pin insert only
E: Environmental
N: Non-environmental
H: Non-environmental insert with a rear grommet, available for pin insert only (recommended for crimp contact)
T: Non-environmental insert with an interfacial seal, available for pin insert only (recommended for PC tail contact)

Notes
1. These contacts are delivered uninstalled
2. Refer to pages 1-41 to select PC tail contacts for receptacle.
3. Not available with iEPX

Disconnect Application

EPXB2 POLARIZATION CODE

As a standard, jackscrews are installed in plugs, and jacknuts are installed in receptacle shells; however, they both can be installed in either plugs and receptacles. The nut can be fixed with your automatic screwdriver and the tool bit we provide (P/N 282664).

Tip: Use the shell reference mark (located at the top of the locking cavity) to choose keying position.

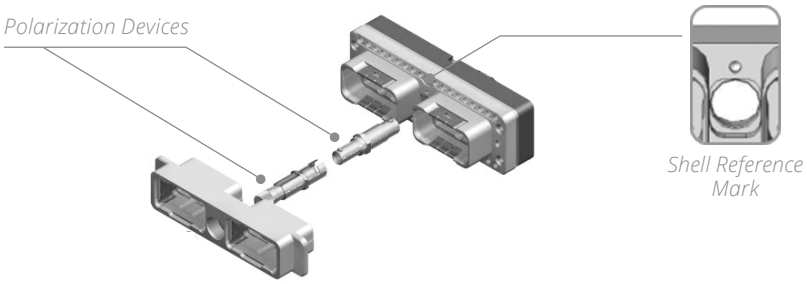

		KEYING POSITION		AVAILABLE AS	
		RECEPTACLE	PLUG	STANDARD	BULKHEAD
Jacknut	From A to F	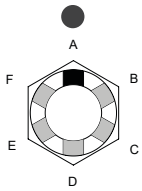	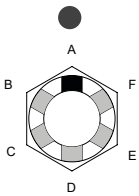	617980029	617980066
	From N to Z	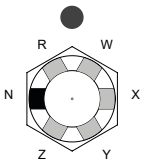	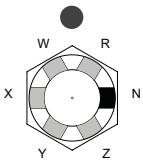	617980028	617980067
	Universal			617980022	N/A
Jackscrew	From A to F	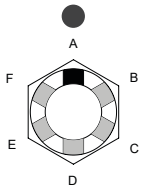	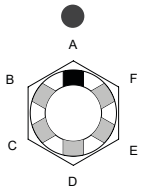	617980012	N/A
	From N to Z	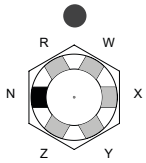	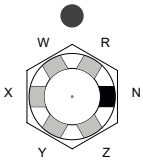	617980013	N/A
	Universal			617980023	N/A

● *Shell Reference Mark*

Disconnect Application

CONTACTS TERMINATION FOR RECEPTACLES

EPXB2 COMPOSITE SHELL

STRAIGHT PC TAIL CONTACT TERMINATION				
MIN LENGTH E MM (INCH)	MIN LENGTH H MM (INCH)	GOLD	TIN-LEAD	PURE TIN (ROHS)
14.20 (0.559) [1]	-	YA	ZA	RA
17.35 (0.683) [1]	-	YB	ZB	RB
19.20 (0.755) [1]	-	YC	ZC	RC
23.10 (0.909)	5.40 (0.212)	YD	ZD	RD

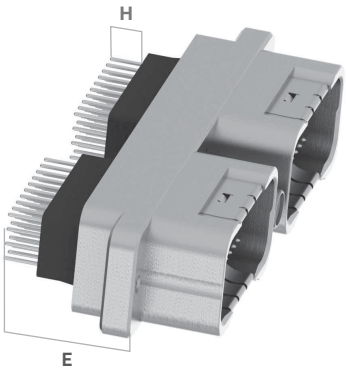

EPXB2 WEIGHT OPTIMIZED ALUMINIUM AND ALUMINIUM SHELL

STRAIGHT PC TAIL CONTACT TERMINATION				
MIN LENGTH E MM (INCH)	MIN LENGTH H MM (INCH)	GOLD	TIN-LEAD	PURE TIN (ROHS)
14.55 (0.572) [1]	-	YA	ZA	RA
17.75 (0.698) [1]	-	YB	ZB	RB
19.55 (0.769) [1]	-	YC	ZC	RC
23.50 (0.925)	5.40 (0.212)	YD	ZD	RD

GROUND BLOCK

Radiall provides a unique patented feature by integrating a ground block directly on the shell. This option permits very short ground terminations.

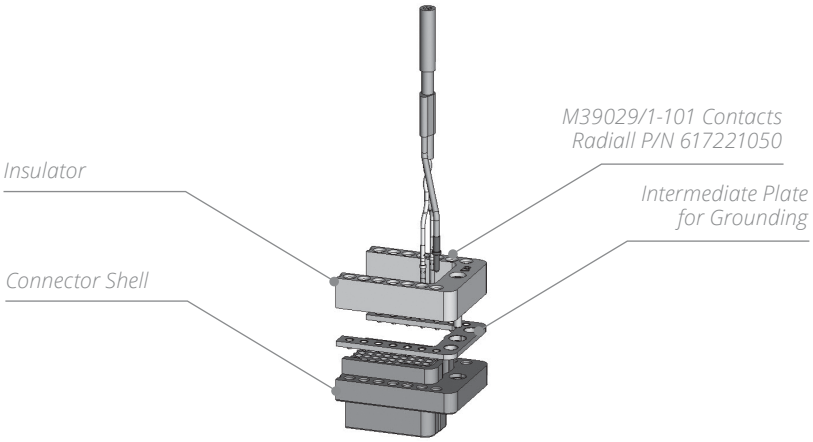

Notes

1. These PC tail lengths are not compatible with EPXBE, EPXBH or EPXBB inserts.

Disconnect Application

EPXB2 ALUMINIUM SHELL DIMENSIONS

CLASS N&J

CLASSIC

Receptacle [HL]

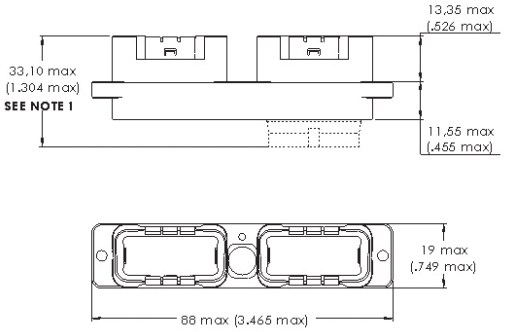

Plug [PB]

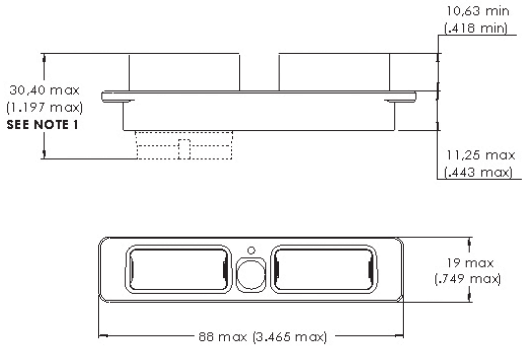

CLASS N

GROUND BLOCK

Receptacle [ZA]

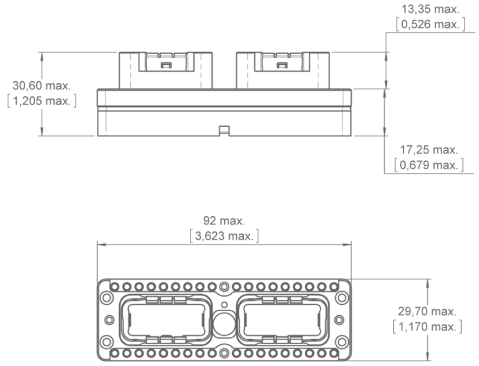

Plug [WA]

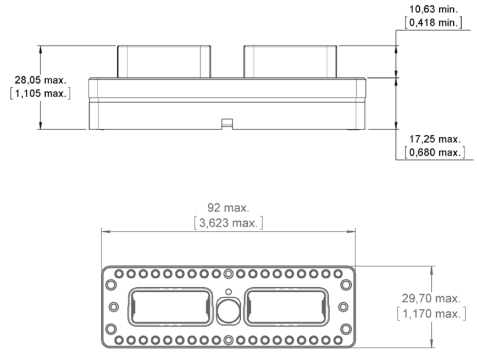

BULKHEAD

Receptacle [BA]

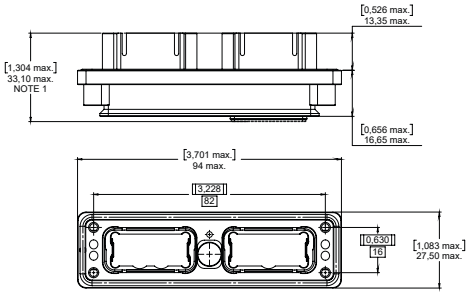

Notes

1. *For insert with grommet: maximum dimension is the one shown in the drawing.*
   For insert without grommet: insert is flush to the shell. Maximum dimension for the receptacle is 25.55 mm (1.006 in.) and for the plug is 23.52 mm (0.926 in.) .
   For insert with optical contacts: the maximum dimension for the receptacle is 38.70 mm (1.524 in.) and for the plug is 36.00 mm (1.418 in.).

Disconnect Application

EPXB2 ALUMINIUM SHELL DIMENSIONS

CLASS J

iEPX

Receptacle [CL]

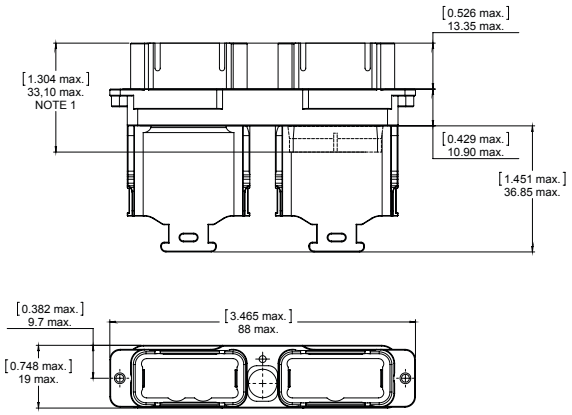

Plug [DB]

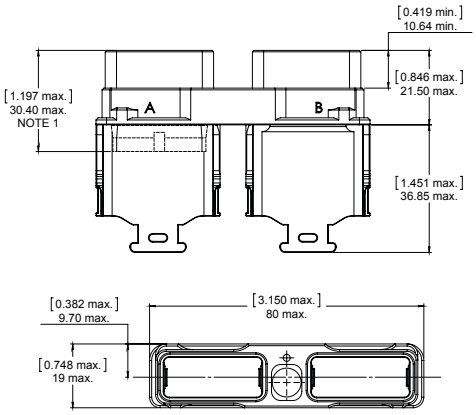

SINGLE PANEL CUT-OUT

CLASS N & J

Shell Mounting Code D, F and L

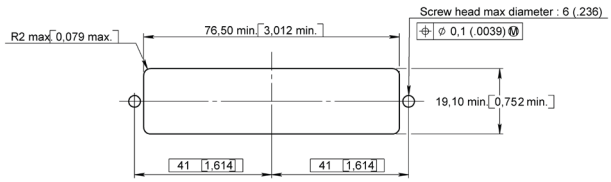

Shell Mounting Code A

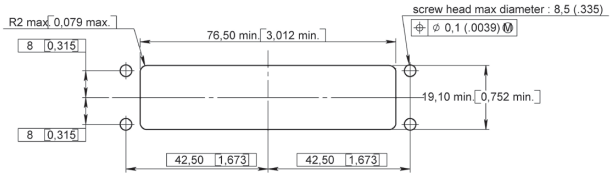

CLASS N - BULKHEAD RECEPTACLE

Shell Mounting Code A

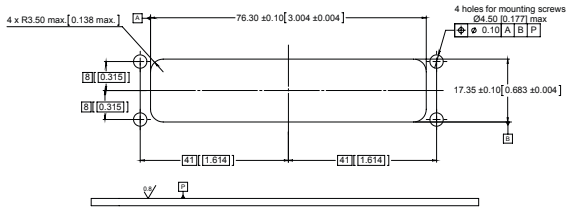

MULTIPLE PANEL CUT-OUT

CLASS N & J

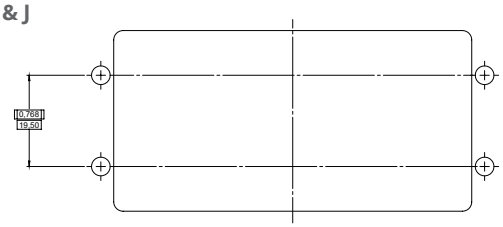

Notes

1. For insert with grommet: maximum dimension is the one shown in the drawing.
For insert without grommet: insert is flush to the shell. Maximum dimension for the receptacle is 25.55 mm (1.006 in.) and for the plug is 23.52 mm (0.926 in.).
For insert with optical contacts: the maximum dimension for the receptacle is 38.70 mm (1.524 in.) and for the plug is 36.00 mm (1.418 in.).

Disconnect Application

EPXB2 COMPOSITE SHELL DIMENSIONS

CLASS M

Receptacle [LL]

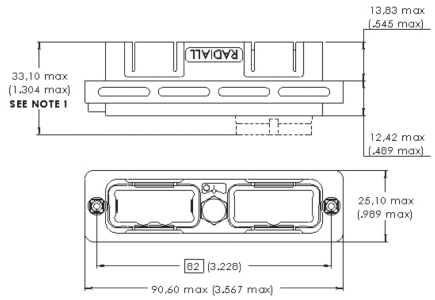

Plug [PB]

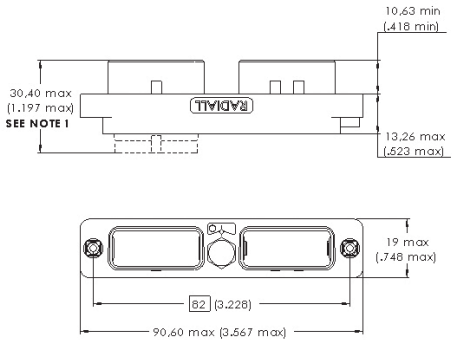

SINGLE PANEL CUT-OUT

Shell Mounting Code D and L

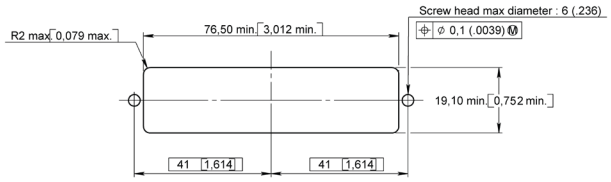

MULTIPLE PANEL CUT-OUT

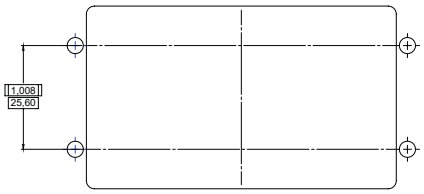

Notes

1. *For insert with grommet (EPXBE and EPXBH): maximum dimension is the one shown in the drawing.*
   For insert without grommet (EPXBN): is flush to the shell. Maximum dimension for the receptacle is 25.55 mm (1.006 in.) and for the plug is 23.52 mm (0.926 in.).
   For inserts with optical contacts: the maximum dimension for the receptacle is 38.70 mm (1.524 in.) and the plug is 36.00 mm (1.418 in.).

Disconnect Application

EPXB2 WEIGHTS

Weights include the shell with no polarization. If locking is needed, please add the following weights:

- Jackscrew: 9.0 g
- Jacknut: 7.8 g
- Bulkhead Jacknut: 8.7 g

CLASS	SHELL MOUNTING / SHELL STYLE	A	B	D	F	L
Class N	L	-	-	45 g (1.59 oz)	45 g (1.59 oz)	45 g (1.59 oz)
	H	-	35 g (1.23 oz)	36 g (1.27 oz)	36 g (1.27 oz)	36 g (1.27 oz)
	Z	80 g (2.82 oz)	80 g (2.82 oz)	-	-	-
	R	45 g (1.59 oz)	-	-	-	-
	P	-	30 g (1.06 oz)	30 g (1.06 oz)	-	30 g (1.06 oz)
	W	75 g (2.65 oz)	75 g (2.65 oz)	-	-	-
	B	50 g (1.76 oz)	-	-	-	-
Class J	H	-	-	-	-	27 g (0.95 oz)
	C	-	-	-	-	35 g (1.23 oz)
	P	-	25 g (0.88 oz)	-	-	-
	D	-	30 g (1.06 oz)	-	-	-
Class M	L	-	-	35 g (1.23 oz)	-	35 g (1.23 oz)
	P	-	24 g (0.85 oz)	25 g (0.88 oz)	-	25 g (0.88 oz)

Rack & Panel Application

EPXB2 ACCESSORIES

	PART NUMBER	DESCRIPTION
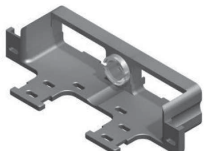	617922007	Straight Strain Relief (Composite)
	617922014	Straight Strain Relief for Fiber Optic Cable (Anodized Aluminium)
	617928100	Straight EMI Backshell (Nickel-Plated Composite)
	617925069	Short Straight EMI Backshell (Nickel-Plated Composite)
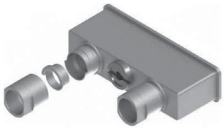	617925052	EMI Backshell for Braid Shield Termination (Nickel-Plated Aluminium)
	617925054	EMI Backshell For Screened Twisted Pair Cables (Nickel-Plated Aluminium)
	617925056	Backshell for Large Sized Wire Harnesses (Nickel-Plated Aluminium) [1]
	617925018	EMI Backshell for iEPX Connectors (Composite)
	617922029	Fiber Optic Backshell (Composite)

Notes

1. Not compatible with jackscrew

Rack & Panel Application

EPXB2 SPARE PARTS

	PART NUMBER	DESCRIPTION
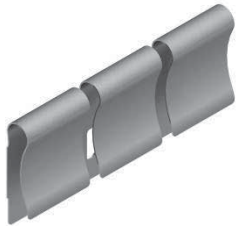	617954101	Grounding Spring (For EPXB2 Aluminium Only)
	617980029	Jacknut – A/B/C/D/E/F
	617980028	Jacknut – N/R/W/X/Y/Z
	617980022	Universal Jacknut
	617980066	Bulkhead Jacknut – A/B/C/D/E/F
	617980067	Bulkhead Jacknut – N/R/W/X/Y/Z
	617980012	Jackscrew – A/B/C/D/E/F
	617980013	Jackscrew – N/R/W/X/Y/Z
	617980023	Universal Jackscrew
	617954002	Dust Cap for Plug Shell (Pink Color)
	617954003	Dust Cap for Receptacle Shell (Pink Color)
	617954004	ESD Dust Cap Plug Shell (Black Color)
	617954005	ESD Dust Cap Receptacle Shell (Black Color)
	617929023	Sealing Inserts for Fly Away Applications: Mateable with Pin Insert
	617929022	Sealing Inserts for Fly Away Applications: Mateable with Socket Insert

Rack & Panel Application

DISCONNECT TOOLS

	PART NUMBER	DESCRIPTION	TO BE USED WITH		
			EPXA1	EPXB1	EPXB2
	282664	1/4 in. Hex. Screwdriver Bit to Affix the Nut of the Jackscrew or the Jacknut to the EPXB2 Accessories	-	-	✓
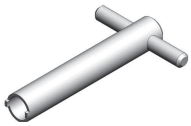	282665	Spigot Wrench to Affix the Nut of the Jackscrew or the Jacknut to the EPXB2 Accessories	-	-	✓
	282666	Allen Wrench for 1/4 turn Fasterner (3/32 in.)	✓	✓	-
	282666002	Allen Wrench for Rear Accessories (5/64 in.)	-	✓	-
	282666001	Allen Wrench for Jackscrew (9/64 in.)	-	-	✓
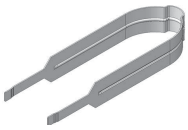	282521002	Insert Extraction Tool	-	✓	✓
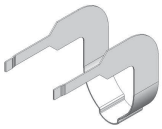	282521004	Right Angle Insert Extraction Tool	-	✓	✓
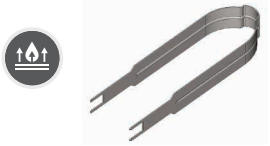	282521007	Bulkhead Insert Extraction Tool	-	-	✓
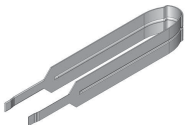	282521005	Insert Extraction Tool	✓	-	-
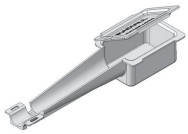	617954020	Plastic Box to Protect Wired Inserts during Handling	✓	✓	✓
	F780855000	Hexagonal Key 2 mm (5/64 in.) Flats for Sleeve Holder Removal	-	✓	✓
	282668001	Tweezers to Change Polarizing Posts and Keys	-	✓	-

Rack & Panel Application

EPXB3 PRODUCT OVERVIEW

Detailed View of Receptacle and Plug with Accessories for the EPXB3 Rack & Panel Connector:

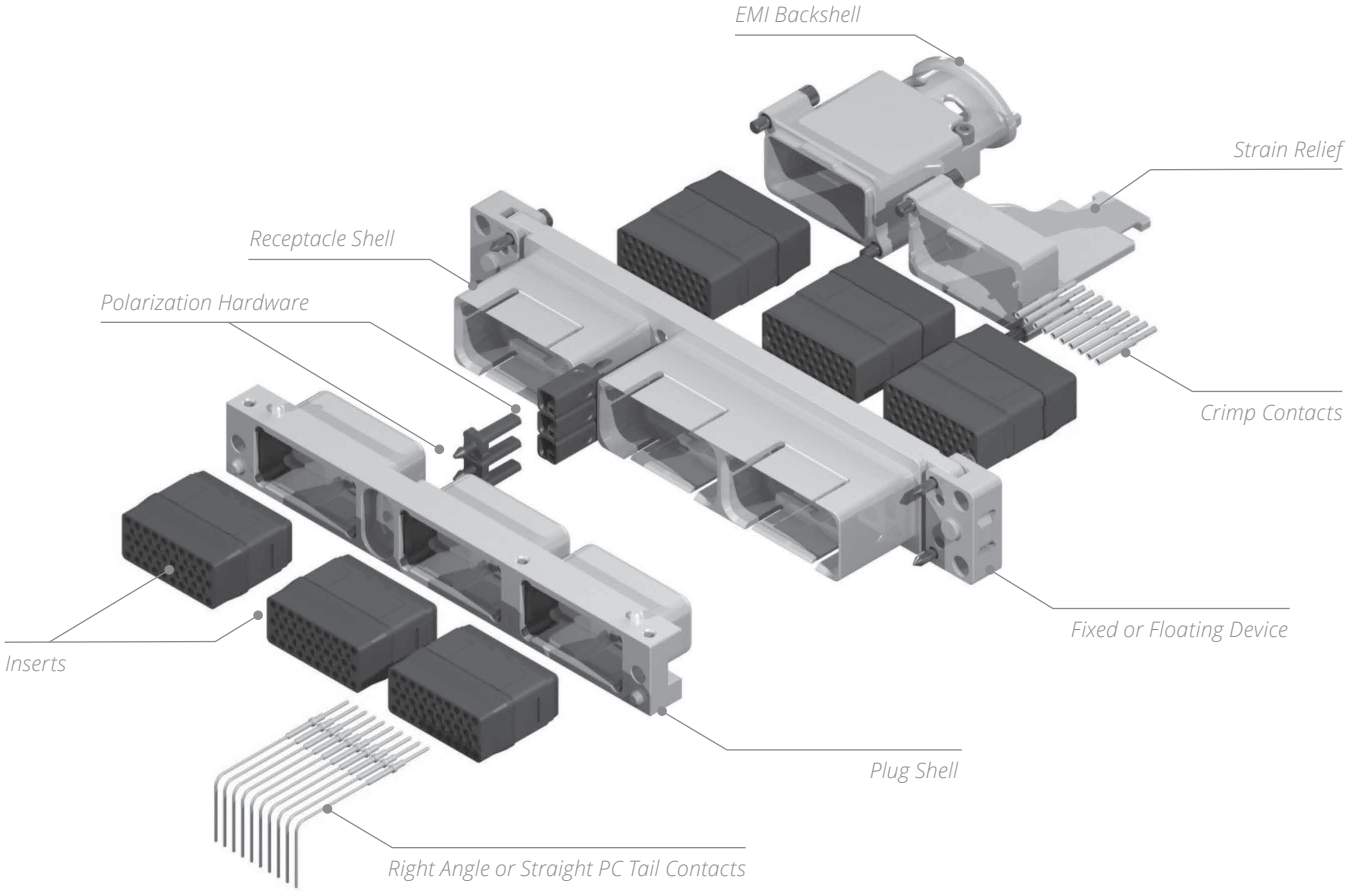

Rack & Panel Application

HOW TO ORDER EPXB1, B2, B3 & B4 SHELL

EPX

SERIES PREFIX

SHELL SIZE
B1: One cavity shell
B2: Two cavity shell
B3: Three cavity shell
B4: Four cavity shell

SHELL STYLE
P: Plug, nickel-plated
R: Receptacle, nickel-plated

SHELL MOUNTING
(refer to page 1-52 for codes)
M: Plug, fixed connector with Ø 3.96 mm holes and 4-40 UNC on side
N: Plug, fixed connector with 8-32 UNC and 4-40 UNC on side
S: Plug or Receptacle, fixed with 4 × 8-32 UNC
T: Receptacle, floating with 4 × 8-32 UNC (two axes) [1]

POLARIZATION CODE
1: Shell delivered with polarizing keys unassembled
2: Shell delivered with no polarizing keys

PANEL CUT-OUT CODING
A TO Z: Receptacle, refer to page 1-54 for the code selection
0 (ZERO): Plug, no panel cut-out coding

Notes
1. This floating option is not available in EPXB4 version.

Rack & Panel Application

HOW TO ORDER EPXB1, EPXB2, B3 & B4 ASSEMBLY KIT FOR LRM

Assembly kit is delivered fully assembled including shell with inserts mounted, with or without contacts according to the selection. When selecting your insert codes, do not forget to place them in the order you want them assembled. Polarization hardware are always provided unassembled with assembly kits.

Tips to help you in your selection:

- You are free to use either pin or socket inserts in EPXB plug or receptacle.
- Crimp contacts can be delivered with a kit. Check which contacts will be included on page 1-10.
- If PC tail contacts are selected then all cavities including signal, power and quadrax are populated. Size 5 coax cavities are not populated.
- If PC tail contacts are needed, remember that only straight pin PC tail contacts are available, and in plug only.

All connector inserts will use the same insert class and the same contact termination.

EPX

SHELL SELECTION PART

SERIES PREFIX

SHELL SIZE
B1: One cavity shell
B2: Two cavity shell
B3: Three cavity shell
B4: Four cavity shell

SHELL STYLE
P: Plug, nickel-plated
R: Receptacle, nickel-plated

SHELL MOUNTING
(refer to page 1-52 for codes)
M: Plug, fixed connector with Ø 3.96 mm holes and 4-40 UNC on side
N: Plug, fixed connector with 8-32 UNC and 4-40 UNC on side
S: Plug or Receptacle, fixed with 4 × 8-32 UNC
T: Receptacle, floating with 4 × 8-32 UNC (two axes) [1]

PANEL CUT-OUT CODING
A TO Z: For receptacle, refer to page 1-54 for the code selection
0 (ZERO): For plug, no panel cut-out coding

INSERT SELECTION PART

CONTACTS TERMINATION
XS: Female insert without contacts
XP: Male insert without contacts
SS: Female insert with crimp contacts [2]
SP: Male insert with crimp contacts [2]
YA: Gold PC tail contacts length A [3]
ZA: Tin-lead PC tail contacts length A [3]
RA: Pure tin (RoHS) PC tail contacts length A [3]

INSERT CODE
Refer to page 1-10 to select insert code

INSERT CLASS
E: Environmental
N: Non-environmental (no rear grommet, no interfacial seal)
H: Non-environmental insert with a rear grommet (recommended for crimp contact)
T: Non-environmental insert with interfacial seal (recommended for PC tail contact)

Notes
1. *This floating option is not available in EPXB4 version*
2. *These contacts are delivered uninstalled*
3. *Refer to page 1-53 to select PC tail contacts for plug*

Rack & Panel Application

EPXB SHELL MOUNTING

RECEPTACLE SIDE	CODE	PLUG SIDES
N/A	M	Fixed Connector with Ø 3.96 mm Holes and 4-40 UNC Front or Side Mount 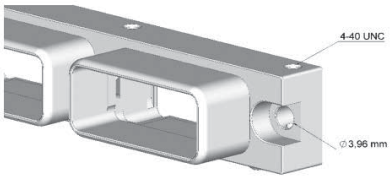
N/A	N	Connector with 8-32 UNC and 4-40 UNC Front or Side Mount 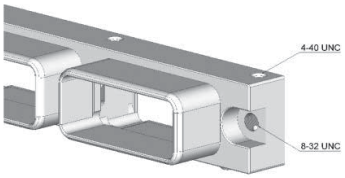
Fixed with 4 × 8-32 UNC Panel Rear Mount 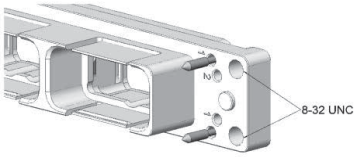	S	N/A
Floating with 4 × 8-32 UNC Panel Rear Mount 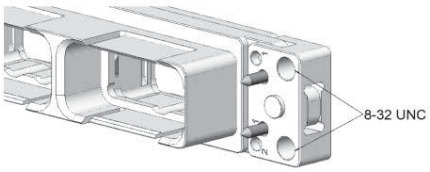	T	N/A

Rack & Panel Application

EPXB POLARIZATION CODE

A polarization device is included in the part number and should be installed as shown below. Each shell has three polarization hardware, which can be in four different positions. Each polarization hardware can have its own position; this allows a large range of codification.

PLUG SIZE 3
Polarization Post

RECEPTACLE SIZE 3
Polarization Key

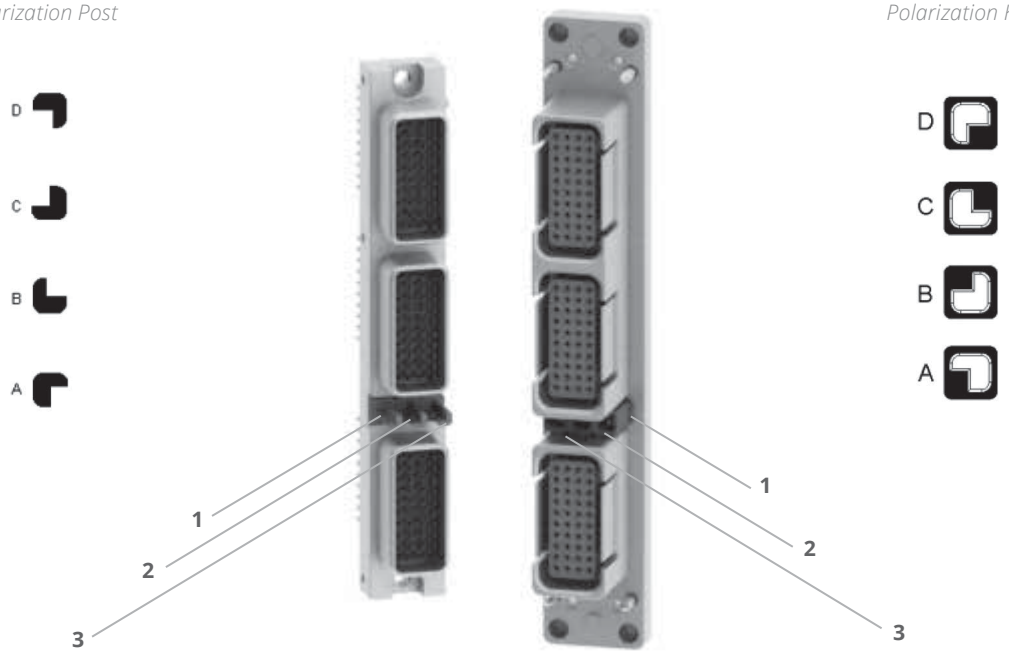

Connectors are shown front side with cavity A upwards.

CONTACT TERMINATIONS FOR EPXB1, EPXB2, EPXB3 AND EPXB4 PLUGS

STRAIGHT PC TAIL CONTACT TERMINATION				
MINI LENGTH E MM (INCH)	MINI LENGTH H MM (INCH)	GOLD	TIN-LEAD	PURE TIN (ROHS)
10.60 (0.417) [1]	-	YA	ZA	RA
13.80 (0.543) [1]	-	YB	ZB	RB
15.60 (0.614) [1]	-	YC	ZC	RC
19.55 (0.769)	5.40 (0.212)	YD	ZD	RD

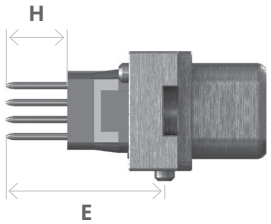

RIGHT ANGLE PC TAIL CONTACT TERMINATION				
MINI LENGTH F MM (INCH)	MINI LENGTH E MM (INCH)	GOLD	TIN-LEAD	PURE TIN (ROHS)
2.20 (0.086)	12.85 (0.505) [1]	GA	LA	TA
3.60 (0.141)	20.10 (0.791)	GB	LB	TB
3.60 (0.141)	12.85 (0.505) [1]	GC	LC	TC
2.20 (0.141)	20.10 (0.791)	GD	LD	TD

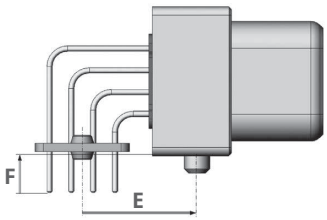

Notes

1. These PC tail lengths are not compatible with EPXBE and EPXBH inserts

Rack & Panel Application

EPXB PANEL CUT-OUT CODING

When several connectors are used with the same equipment, coding is available on the shell to correlate the correct shell with the correct panel cut-out.

On the panel cut-out, four areas are coded: area 1, 2, 3 and 4 (see figure below). For each area, one of the two holes should be drilled (hole n°1 or hole n°2). Each hole on the panel cut-out corresponds to the use of a coding pin on the shell.

PANEL CUT-OUT CODING	PANEL HOLE NUMBER TO DRILL IN AREA 1	PANEL HOLE NUMBER TO DRILL IN AREA 2	PANEL HOLE NUMBER TO DRILL IN AREA 3	PANEL HOLE NUMBER TO DRILL IN AREA 4
A	Connector Delivered With Coding Device Uninstalled			
B	1	1	1	1
C	1	1	1	2
D	1	1	2	1
E	1	1	2	2
F	1	2	1	1
G	1	2	1	2
H	1	2	2	1
J	1	2	2	2
K	2	1	1	1
L	2	1	1	2
M	2	1	2	1
N	2	1	2	2
P	2	2	1	1
R	2	2	1	2
S	2	2	2	1
T	2	2	2	2
Z	Connector Delivered Without Coding Pin [1]			

CODING PINS ARE FOR RECEPTACLE ONLY.

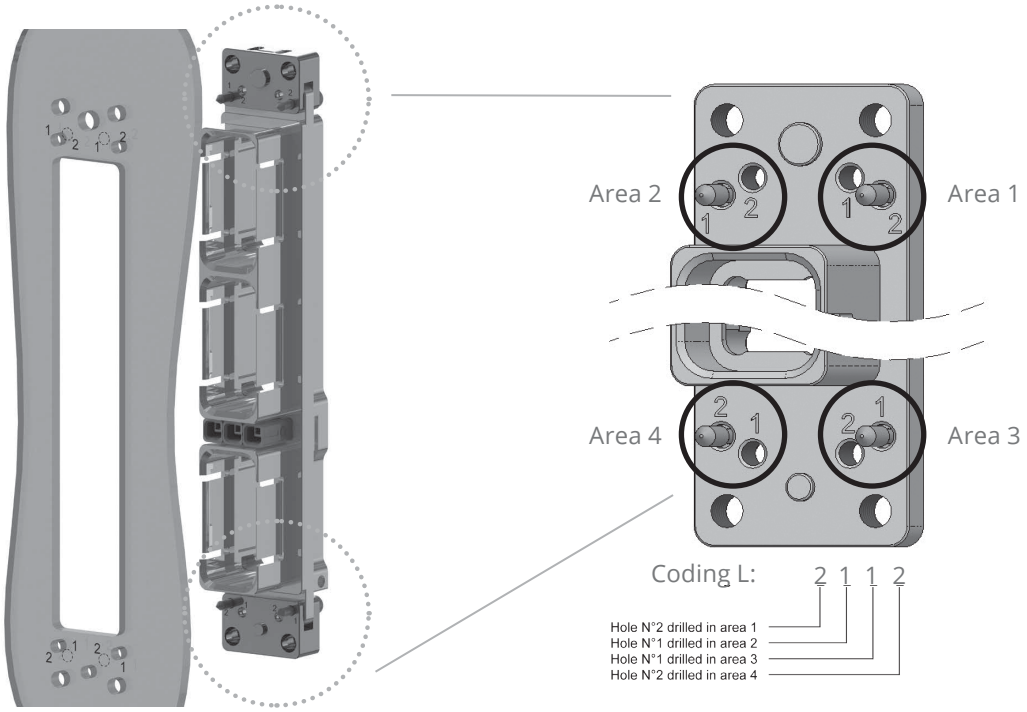

Notes

1. Z panel cut-out coding is only available with fix mounting.

Rack & Panel Application

EPXB1 SHELL DIMENSIONS & PANEL CUT-OUTS

RECEPTACLE

Floating Mount *Fixed Mount*

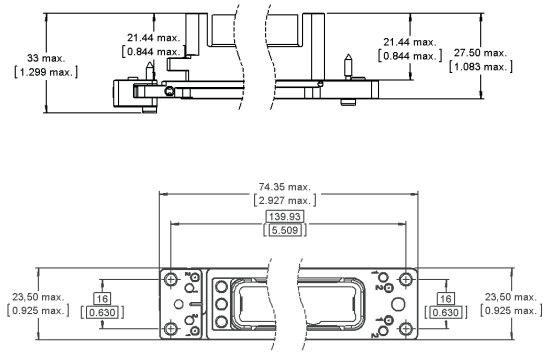

PLUG

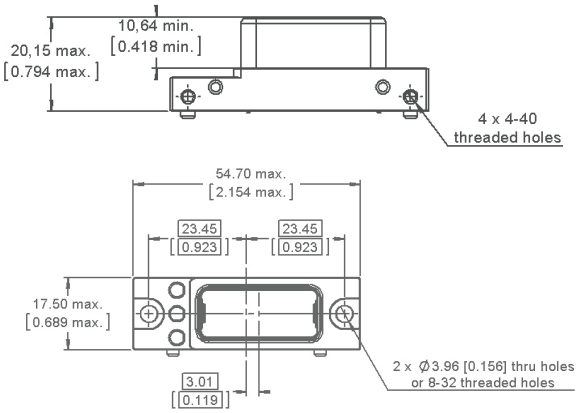

PANEL CUT-OUTS

Receptacle - Shown from the Rear Side

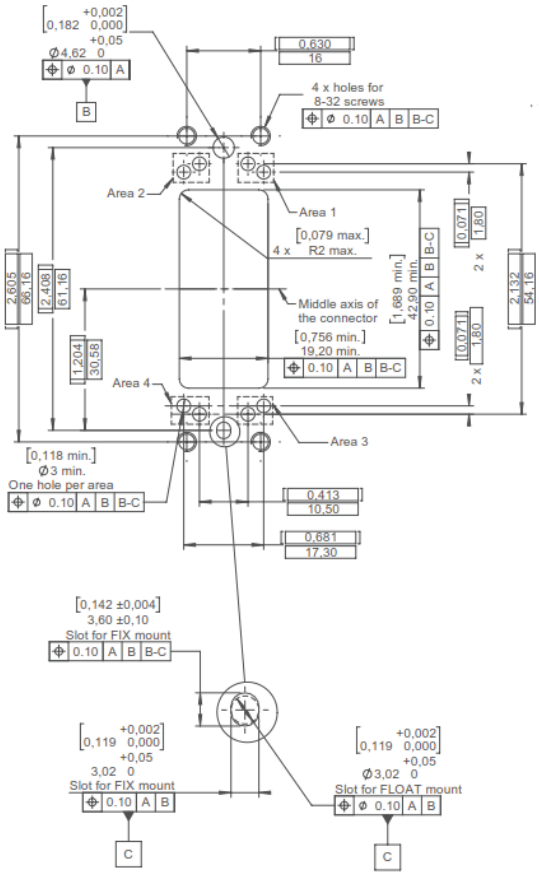

Plug - Shown from the Front Side

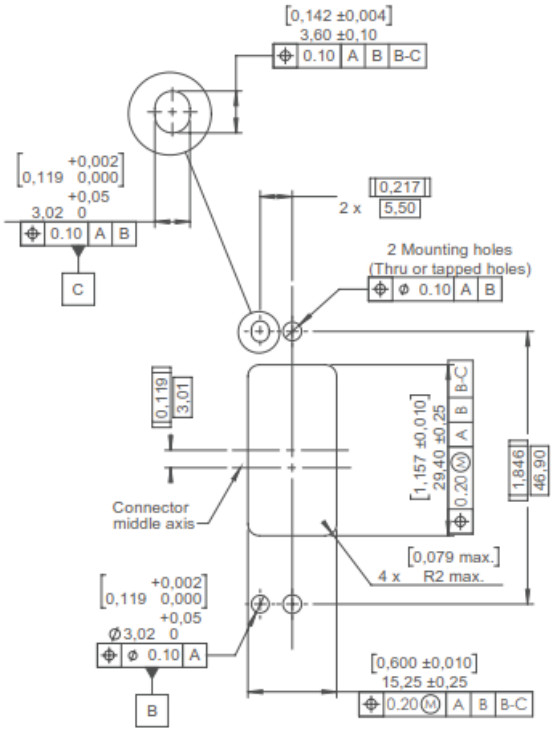

Rack & Panel Application

EPXB2 SHELL DIMENSIONS & PANEL CUT-OUTS

RECEPTACLE

Floating Mount *Fixed Mount*

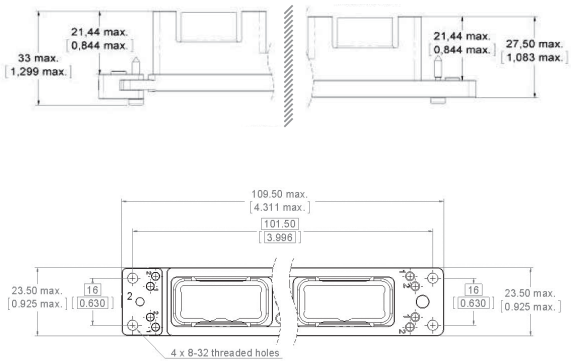

PLUG

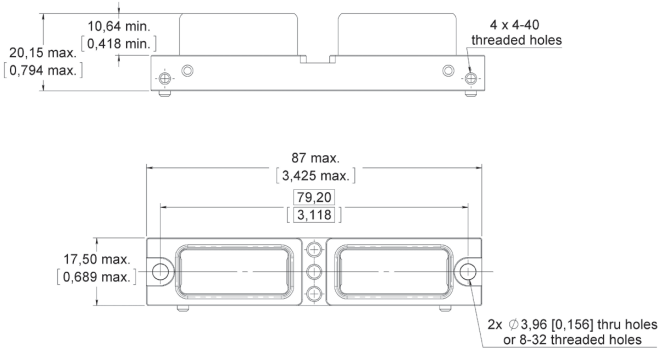

PANEL CUT-OUTS

Receptacle - Shown from the Rear Side

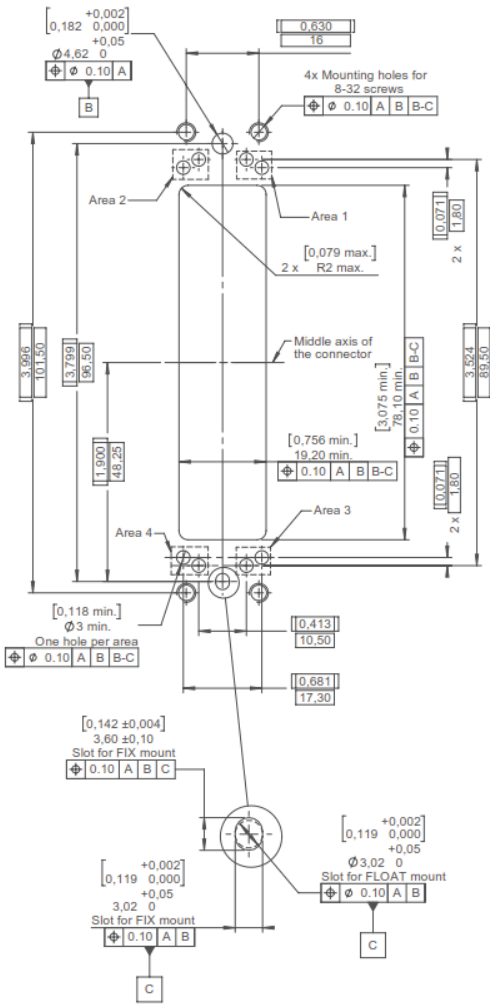

Plug - Shown from the Front Side

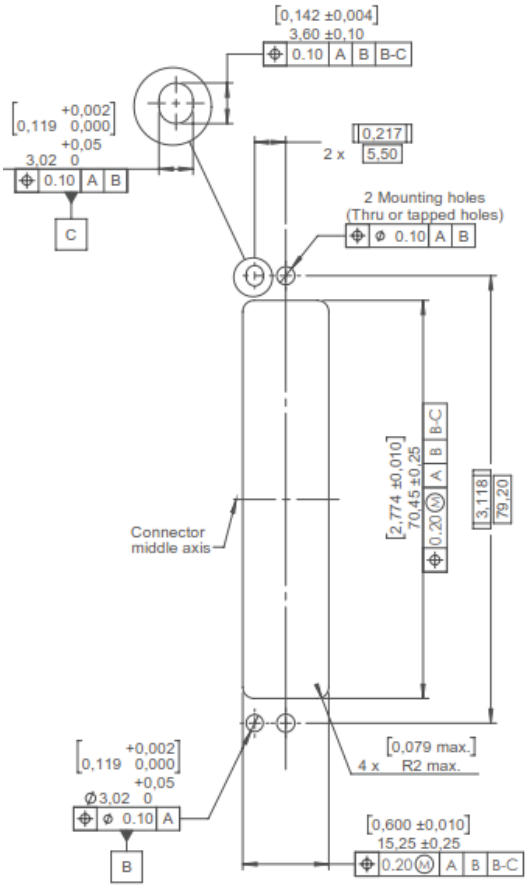

Rack & Panel Application

EPXB3 SHELL DIMENSIONS & PANEL CUT-OUTS

RECEPTACLE

Floating Mount *Fixed Mount*

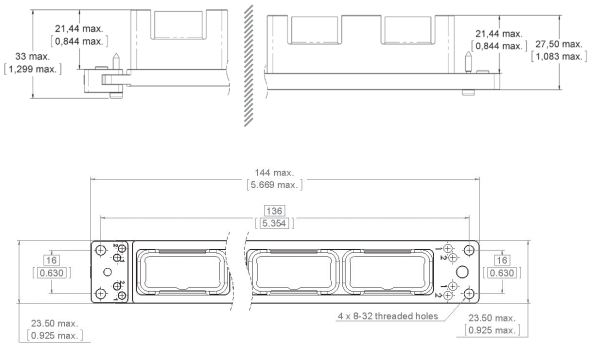

PLUG

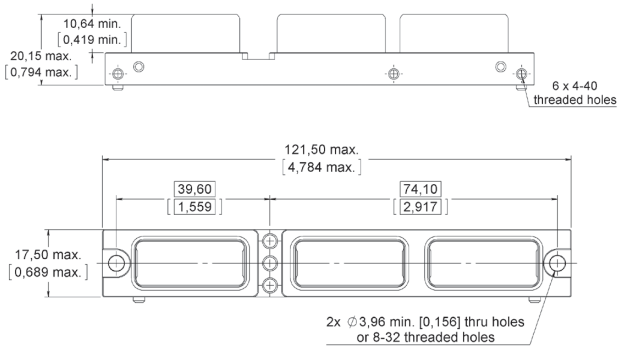

PANEL CUT-OUTS

Receptacle - Shown from the Rear Side

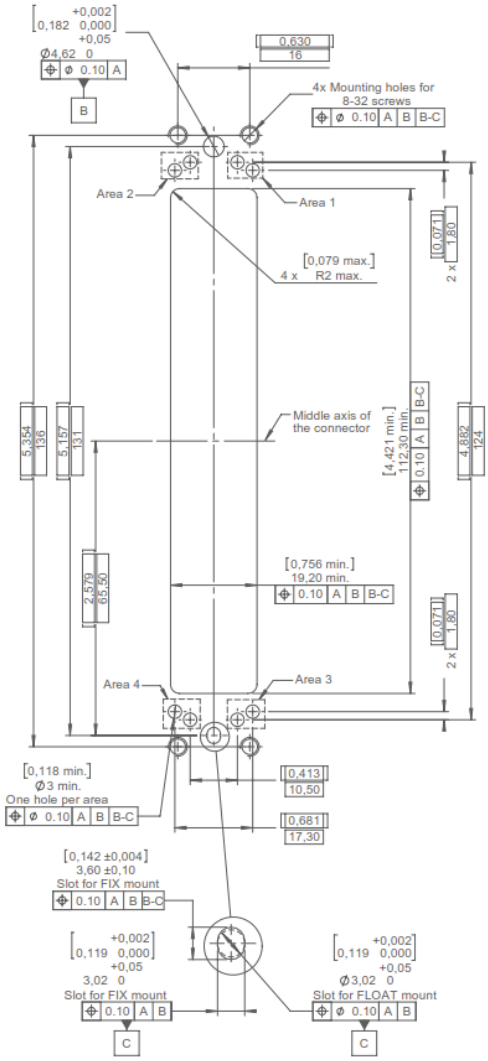

Plug - Shown from the Front Side

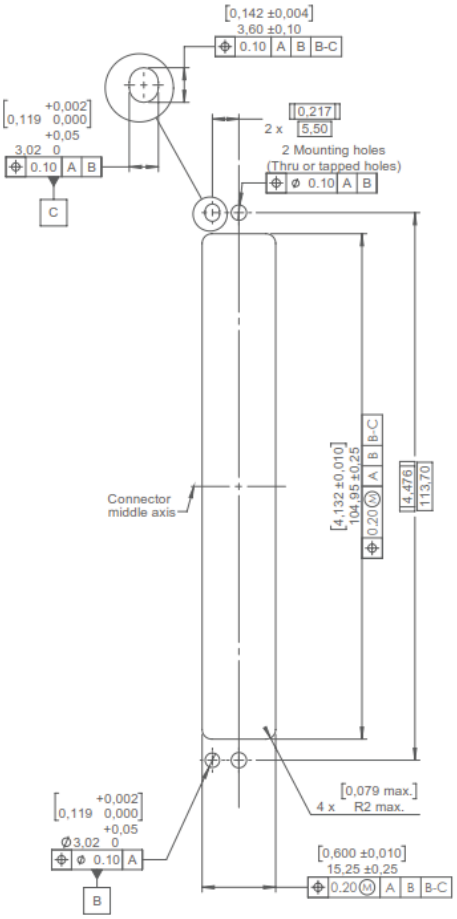

Rack & Panel Application

EPXB4 SHELL DIMENSIONS & PANEL CUT-OUTS

RECEPTACLE

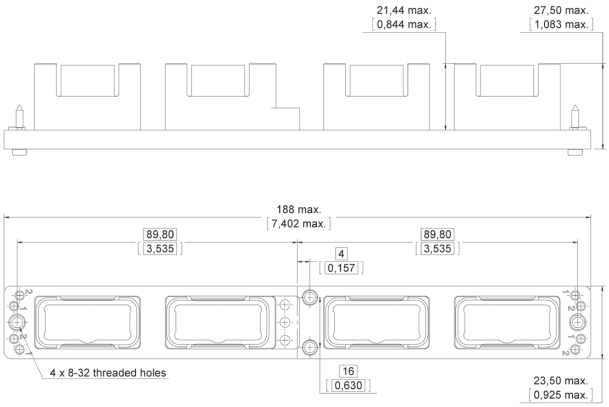

PLUG

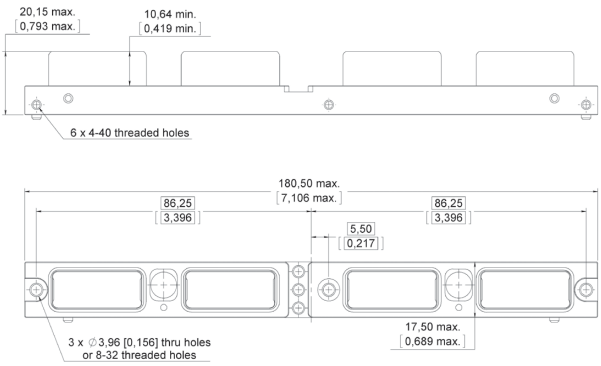

PANEL CUT-OUT

Receptacle - Shown from the Rear Side

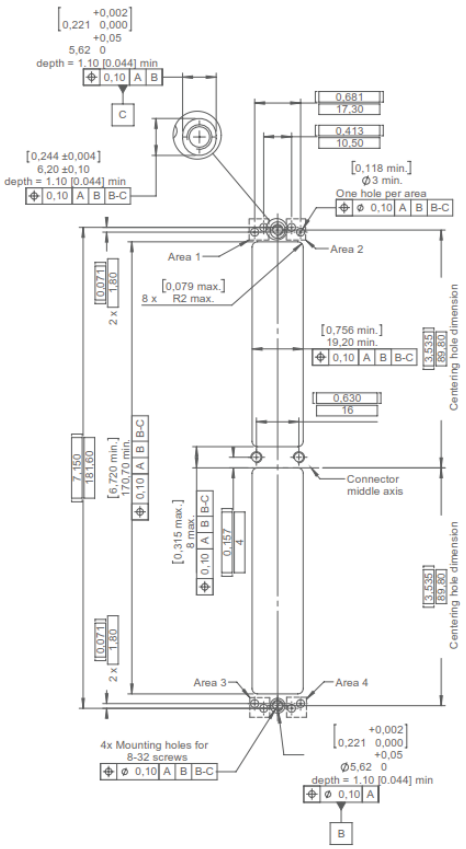

Plug - Shown from the Front Side

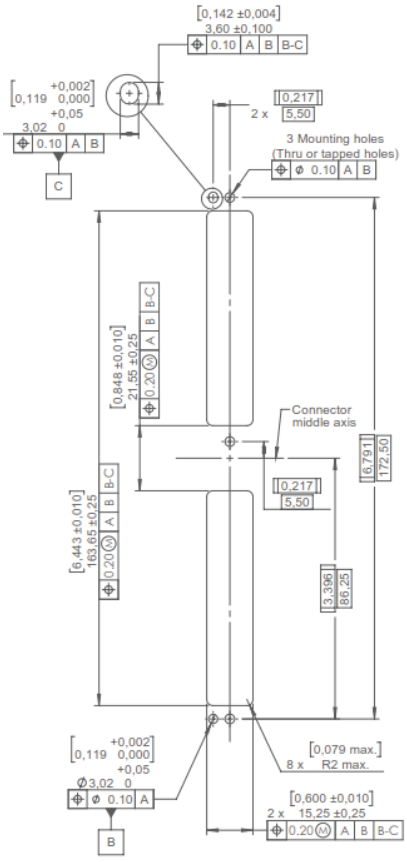

Rack & Panel Application

RACK & PANEL ACCESSORIES

	PART NUMBER	DESCRIPTION
	617925073	EMI Backshell for Receptacle Only (Aluminium, Nickel-Plated)
	617922022	Straight Strain Relief for Receptacle Only (Composite)
	617954002	Dust Cap for Plug Shell (Pink Color)
	617954003	Dust Cap for Receptacle Shell (Pink Color)
	617954004	ESD Dust Cap Plug Shell (Black Color)
	617954005	ESD Dust Cap Receptacle Shell (Black Color)
	617980052	Coding Pin
	617980030	Polarization Post
	617980031	Polarization Key

Rack & Panel Application

RACK & PANEL TOOLS

	PART NUMBER	DESCRIPTION
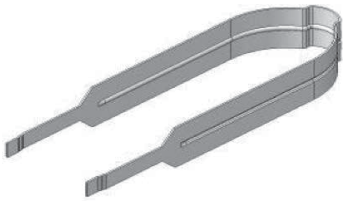	282521002	Insert Extraction Tool
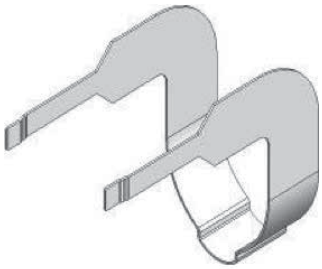	282521004	Right Angle Insert Extraction Tool
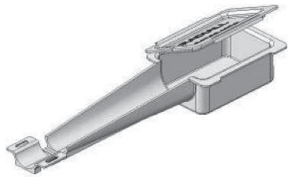	617954020	Plastic Box to Protect Wired Inserts During Handling
	F780855000	Hexagonal Hey 2 mm (5/64 in.) Flats for Sleeve Holder Removal

Rack & Panel Application

EPXB2 FOR LRU PRODUCT OVERVIEW

Detailed View of a Receptacle and Plug for the EPXB2 LRU Connector:

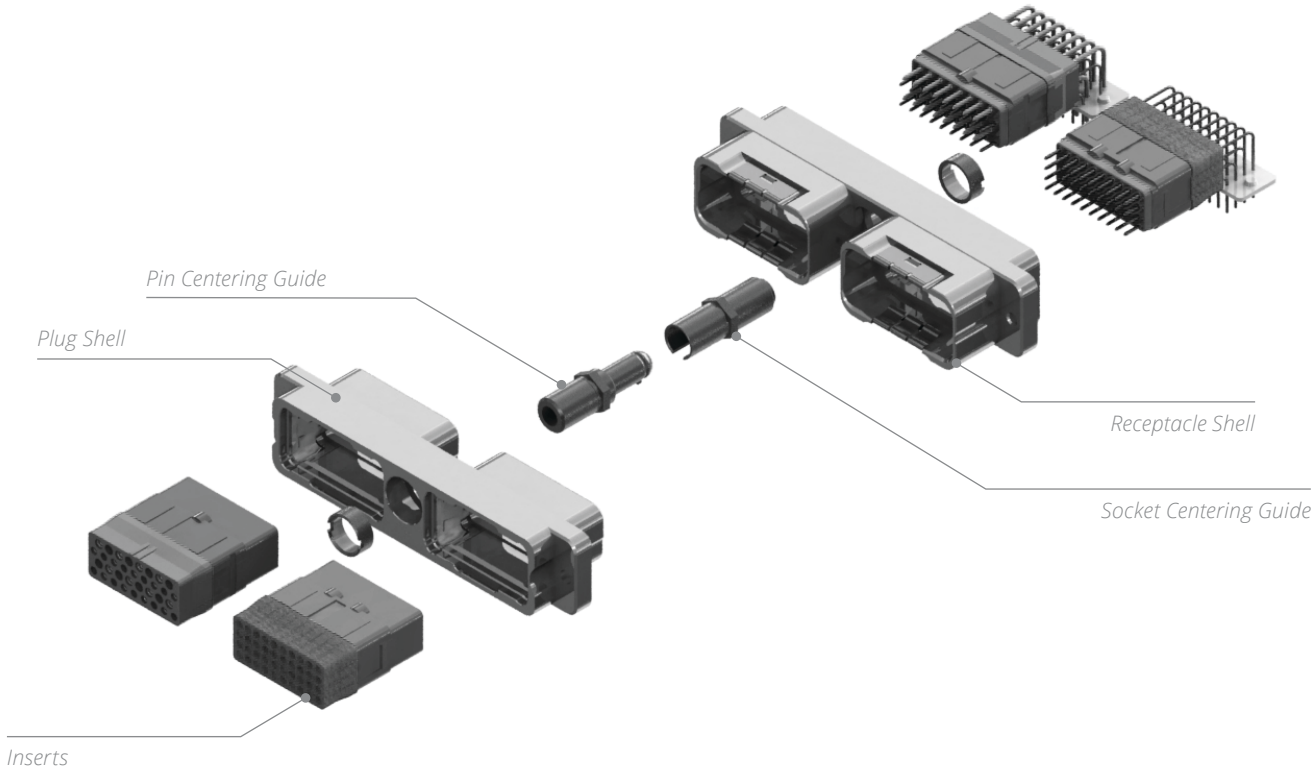

Rack & Panel Application

HOW TO ORDER EPXB2 SHELL FOR LRU

EPX

SERIES PREFIX

SHELL SIZE
B2: Two cavity shell

SHELL STYLE
For compatibility options, see the table below
L: Receptacle with flange
H: Classic receptacle
Z: Receptacle with ground block
R: Receptacle without ground fingers
P: Classic plug
W: Plug with ground block
D: iEPX plug with integrated stain-relief

SHELL MOUNTING
A: Panel rear mounted connector with 4 × 6-32 mounting holes
D: Connector with 2 × Ø 3.10 mm thru holes
F: Panel rear mounted connector with 2 × 6-32 mounting holes
L: Panel rear mounted connector with 2 × 4-40 mounting holes

LOCKING & POLARIZATION DEVICE [1]
4: Pin centering guide
5: Socket centering guide

POLARIZATION CODE
2: Polarizing device A to F delivered unassembled
3: Polarizing device N to Z delivered unassembled

SHELL PLATING
N: Nickel-plated aluminium
M: Nickel-plated composite
J: Nickel-plated, weight-optimized aluminium

AVAILABLE SHELL MOUNTING

	SHELL STYLE	**A** *(4 × 6.32 UNC)*	**B** *(No Holes)*	**D** *(2 × Ø 3.10 mm)*	**F** *(2 × 6.32 UNC)*	**L** *(2 × 4.40 UNC)*
Class N *(Aluminium)*	L	-	-	✓	✓	✓
	H	-	✓	✓	✓	✓
	Z	✓	✓	-	-	-
	R	✓	-	-	-	-
	P	-	✓	✓	-	✓
	W	✓	✓	-	-	-
Class J *(Weight-Optimized Aluminium)*	H	-	-	-	-	✓
	P	-	✓	-	-	-
Class M *(Composite)*	L	-		✓	-	✓
	P	-	✓	✓	-	✓

Notes
1. Pin/Socket centering guides can be mounted on either plug or receptacle shells. However, the standard options are:
- Pin centering guide for plug shells
- Socket centering guide for receptacle shells

Rack & Panel Application

HOW TO ORDER EPXB2 ASSEMBLY KIT FOR LRU

Assembly kits are delivered fully assembled including shell with inserts mounted, with or without contacts, according to the selection. When selecting your insert codes, do not forget to place them in the order you want them assembled. Locking and polarizing devices are delivered uninstalled.

Tips to help you in your selection:

- You are free to use either pin or socket inserts in EPXB plug or receptacle.
- Crimp contacts can be delivered with a kit. Check which contacts will be included on page 1-10.
- PC tail contacts can also delivered with a kit. Remember that only straight pin PC tail contacts are available, and in receptacle only.
- If PC tail contacts are selected, then all cavities including signal, power and quadrax are populated. Size 5 coax cavities are not populated.

All connector inserts will use the same insert class and the same contact termination.

EPX

SHELL SELECTION PART

SERIES PREFIX

SHELL SIZE
B2: Two cavity shell

SHELL STYLE
For option compatibility, see table on page 1-62
L: Receptacle with flange and ground fingers
H: Classic receptacle
Z: Receptacle with ground block
R: Receptacle without ground fingers
P: Classic plug
W: Plug with ground block
B: Bulkhead receptacle (bulkhead pin inserts compulsory)

SHELL MOUNTING
A: Rear panel mounted connector with 4 × 6-32 mounting holes
B: No mounting holes
D: Connector with 2 × Ø 3.10 mm thru holes
F: Rear panel mounted connector with 2 × 6-32 mounting holes
L: Rear panel mounted connector with 2 × 4-40 mounting holes

POLARIZATION
1: Jackscrew polarizing device A to F
2: Jacknut polarizing device A to F
3: Without locking device
4: Pin centering guide for plug shell for LRU application only, polarizing device A to F
5: Socket centering guide for receptacle shell for LRU application only, polarizing device A to F
6: Jackscrew polarizing device N to Z
7: Jacknut polarizing device N to Z

SHELL PLATING
N: Nickel-plated aluminium
M: Nickel-plated composite
J: Nickel-plated, weight-optimized aluminium

INSERT SELECTION PART

CONTACTS TERMINATION
XS: Socket insert without contacts
XP: Pin insert without contacts
SS: Socket insert with crimp contacts [1]
SP: Pin insert with crimp contacts [1]
YA: Gold PC tail contacts length A [2] [3]
ZA: Tin-lead PC tail contacts length A [2] [3]
RA: Pure tin (RoHS) PC tail contacts length A [2] [3]

INSERT CODE
Refer to page 1-10 to select insert code

INSERT CLASS
E: Environmental
N: Non-environmental
H: Non-environmental insert with a rear grommet, available for pin insert only (recommended for crimp contact)
T: Non-environmental insert with an interfacial seal, available for pin insert only (recommended for PC tail contact)

Notes
1. These contacts are delivered uninstalled.
2. Refer to pages 1-41 to select PC tail contacts for receptacle.
3. Not available with iEPX

Rack & Panel Application

EPX GALLEY ARINC 810 PRODUCT OVERVIEW

The new EPXB2 Galley connector was specially designed for the severe conditions required by galley equipment. A floating mechanism was developed to avoid any risk of jamming and to guarantee a fully sealed connection.

The EPXB2 is used on ovens, beverage makers, refrigerators, microwave ovens and other equipment that fits within the new standardized galley layouts.

The EPXB2 connector is modular and provides extra contact density to add new contacts such as the #8 Twinax CAN data bus contact. Backshell accessories are also available.

Detailed view of receptacle and plug with accessories for the EPXB2 galley connector:

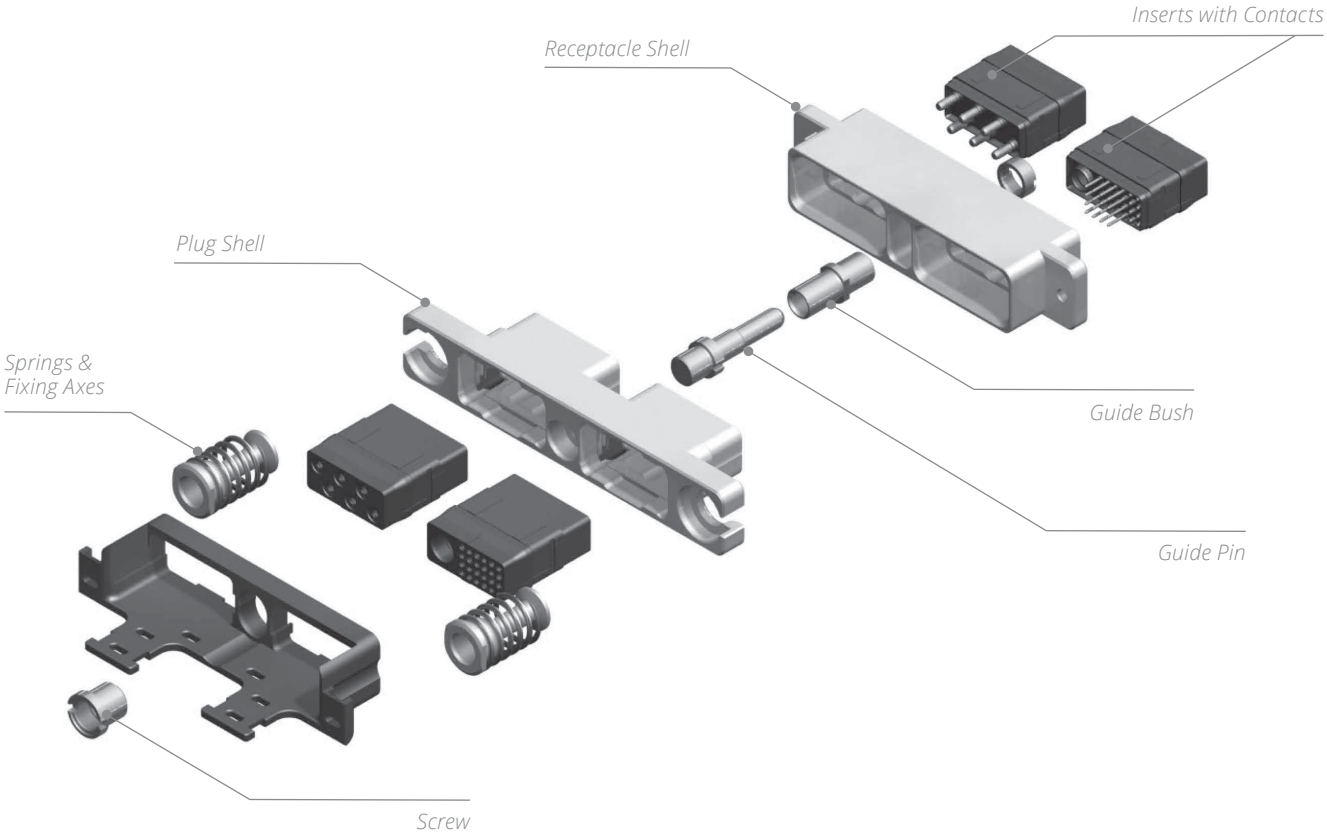

Rack & Panel Application

HOW TO ORDER EPX® GALLEY EQUIPMENT CONNECTOR

RECEPTACLE AND PLUG ASSEMBLY KIT

PART NUMBER	DESCRIPTION
617610188 or 617610558	Receptacle Assembled Kit [1]
617610189	Plug Assembled Kit [1]

Each item included in the kit is indicated in the table below and can also be ordered separately.

RECEPTACLE KITS

SHELL WITH 2 SELF-LOCKING THREADED HOLES

617610188

PART NUMBER	DESCRIPTION	QUANTITY PER KIT
617610212	Receptacle Shell	1
EPXBE25Q1PA	Insert for Cavity A	1
EPXBE06PB	Insert for Cavity B	1
617200	Pin Crimp Contacts/Size 22	15
617250	Pin Crimp Contacts/Size 12	6
616910	Filler Plug	9
617954003	Dust Cap	2

SHELL WITH 2 THRU HOLES

617610558

PART NUMBER	DESCRIPTION	QUANTITY PER KIT
617610419	Receptacle Shell	1
EPXBE25Q1PA	Insert for Cavity A	1
EPXBE06PB	Insert for Cavity B	1
617200	Pin Crimp Contacts/Size 22	15
617250	Pin Crimp Contacts/Size 12	6
616910	Filler Plug	9
617954003	Dust Cap	2

PLUG KIT

617610189 contents

PART NUMBER	DESCRIPTION	QUANTITY PER KIT
617610213	Plug Shell	1
EPXBE25Q1SA	Insert for Cavity A	1
EPXBE06SB	Insert for Cavity B	1
617300	Socket Crimp Contacts/Size 22	15
617350	Socket Crimp Contacts/Size 12	6
616910	Filler Plug	9
617922007	Strain Relief	1
617954002	Dust Cap	2

CAN DATA BUS CONTACTS

PART NUMBER	DESCRIPTION
617165011	Size 8 Twinax Pin Contact
617065011	Size 8 Twinax Socket Contact

Notes

1. Part numbers for assembly kits include: plug or receptacle shell, inserts, contacts, sealing plugs and dust caps.

Rack & Panel Application

DIMENSIONS & PANEL CUT-OUT

EPX® GALLEY EQUIPMENT CONNECTOR PER ARINC 810

RECEPTACLE

Front Mount

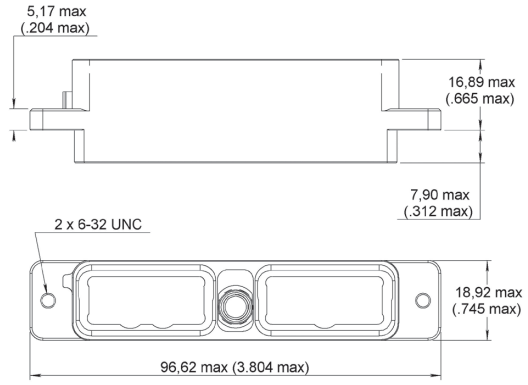

PLUG

Rear Mount

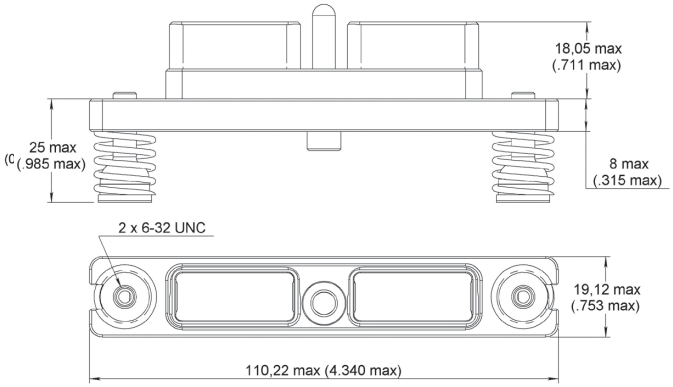

PANEL CUT-OUT

Receptacle

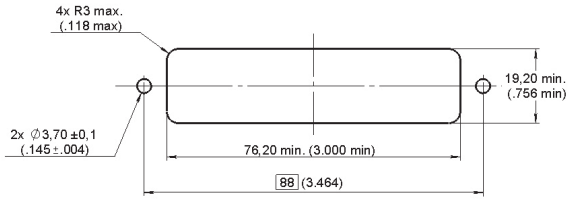

Plug

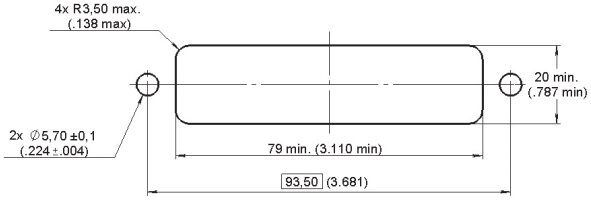

Rack & Panel Application

MULTI-GANG EPX® CONNECTORS

A whole range of multigang connectors are available for disconnect and Rack & Panel applications.

Multigang connectors features and benefits:

- Weight-saving design
- Make installation easier and quicker
- Utilize EPX modularity and its whole range of inserts
- Take advantage of EPX connector functionalities and use EPXB2 standard plug shells with a multigang shell

SPECIFICATIONS

- Several cavities for EPXB inserts (4 to 20 cavities)
- Standard EPX strain reliefs and backshells available
- In accordance with EN4644 performances

Several options are available:

- Grounding block
- Grounding spring fingers
- Float mounting
- Spring-loaded mounting

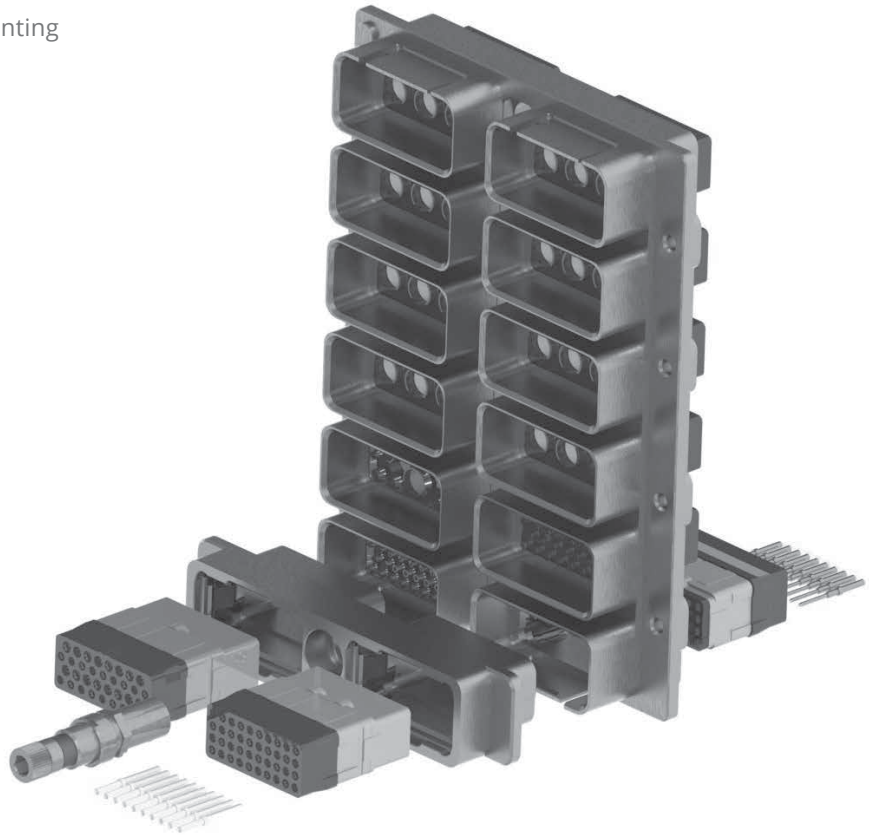

Notes