DuraLok™ ATV 38 Position

Assembly and Disassembly Instructions for DuraLok™ ATV 38 Position

The following Instructions refer to the steps needed for proper contact insertion/extraction when using our DuraLok ATV 38POS plugs and receptacles.

Required Tooling

Part Number	Description
ATRT-100	Contact and Wedgelock Extraction Tool
QXRT16	Extraction Tool for #16 Pin/Socket Contact
DRK-DMP280	Extraction Tool for Size 1.0mm x 0.64mm Pin/Socket Contact

ATRT-100

DRK-DMP280

QXRT16

DuraLok ATV Receptacle: Contact Insertion

Step 1

Crimp pin contacts(SC000571X) to wire. See appropriate datasheets for application tool.

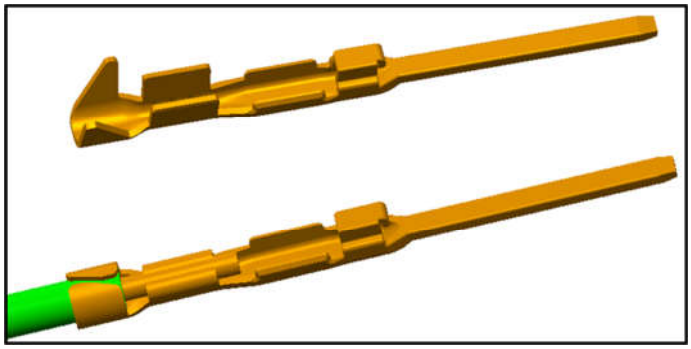

Step 2

Insert crimped contact through rear seal of receptacle.

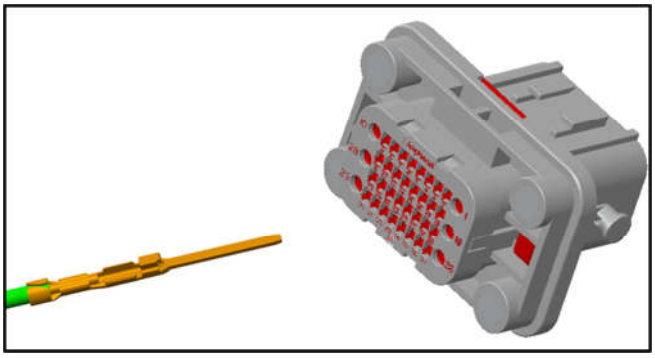

Step 3

Push contact straight into connector until a positive stop is felt.
A slight tug will confirm that it is properly locked in position.

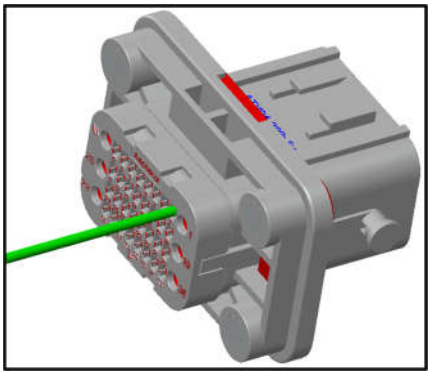

Step 4

Section View showing final position of contact for reference.

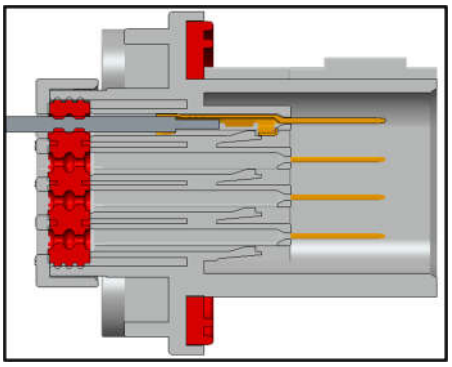

DuraLok ATV Receptacle: Contact Insertion

Step 5

Crimp pin contacts(SPXXM1X) to wire. See appropriate datasheets for application tool.

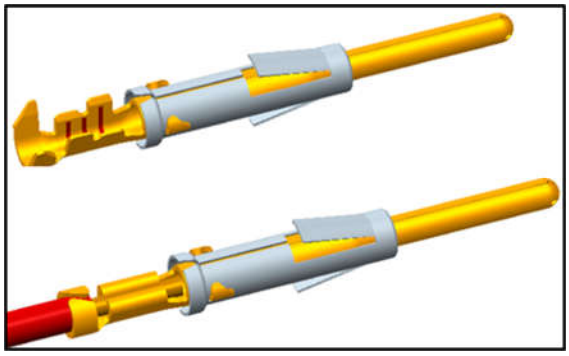

Step 6

Insert crimped contact through rear seal of receptacle.

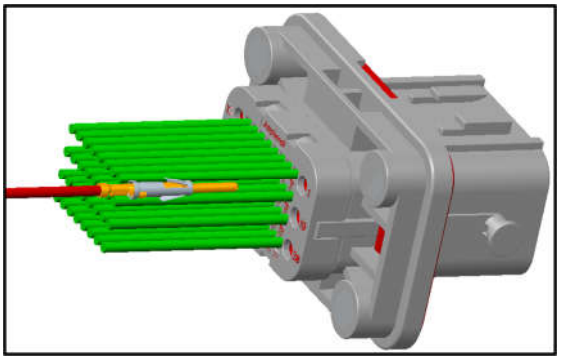

Step 7

Push contact straight into connector until a positive stop is felt.
A slight tug will confirm that it is properly locked in position.

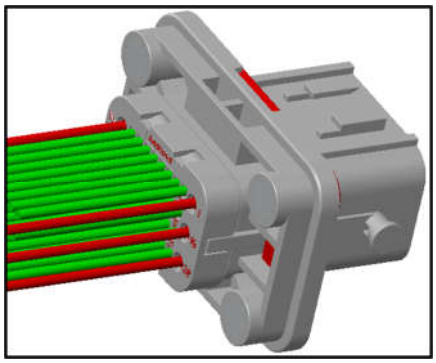

Step 8

Section View showing final position of contact for reference.

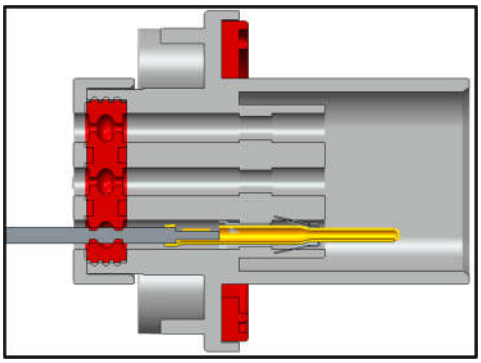

Step 9

Push the wedge vertically into receptacle after the wedge align to the Hole of the receptacle.

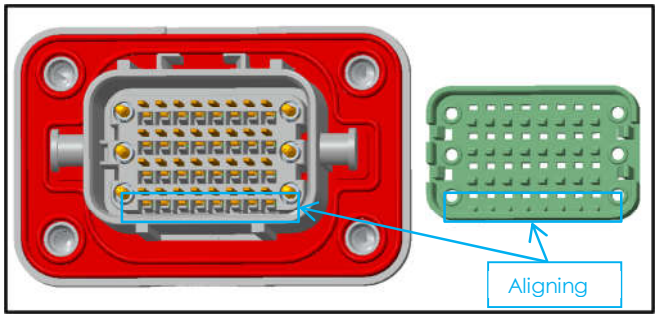

Step 10

Assemble wedge into the connector.

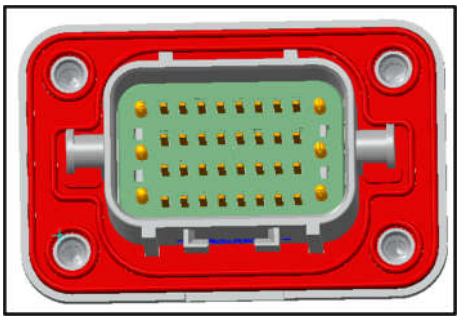

DuraLok ATV Receptacle: Contact Extraction

Step 1

Use the small end of the AT Extraction Tool(ATRT-100) to pry open the 2 side clasps and remove the Location Block.

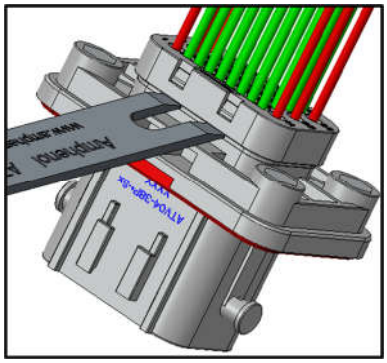

Step 2

Prize up removal tool until cover and wire seal out of connector.

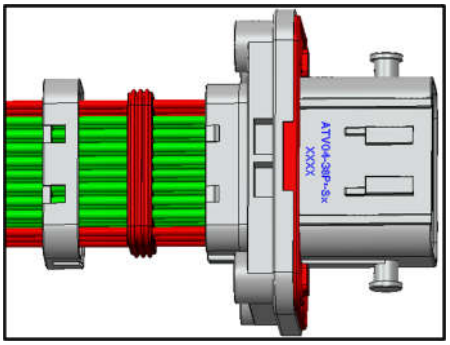

Step 3

Use one end of the workpiece to extend the clamp of the pressure plate.

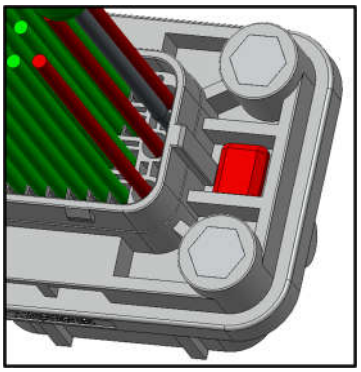

Step 4

Wrap the contact with the tool (DRK-DMP280)and push the cover out of the receptacle.

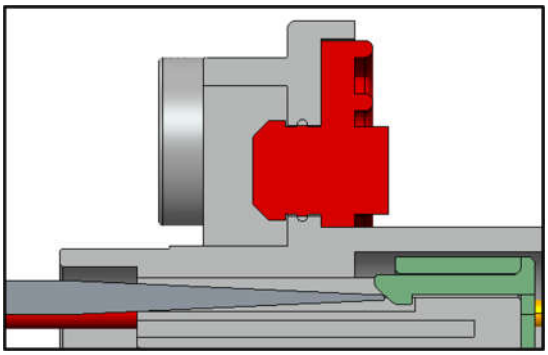

Step 5

The wedge out the connector.

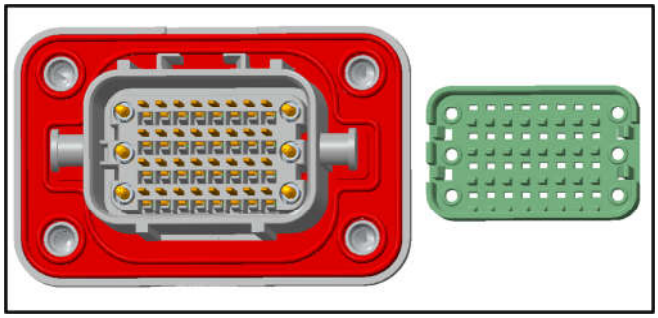

DuraLok ATV Receptacle: Contact Extraction

Step 6

Use a removal tool(QXRT16) to press the SPXXM1X contacts spring and remove it.

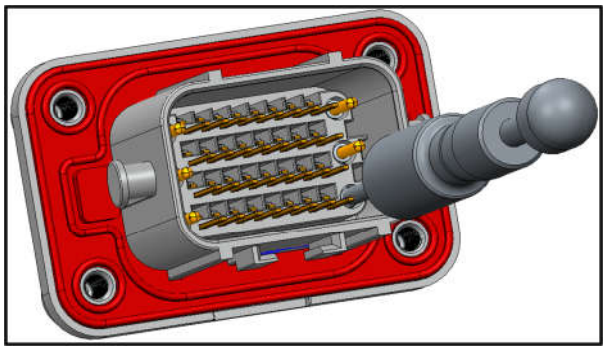

Step 7

Sectional view of tool and terminal matching for pick-up.

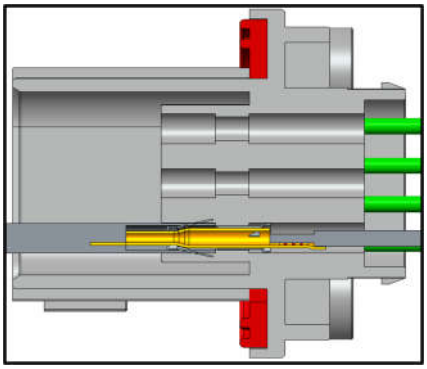

Step 8

Use a removal tool(DRK-DMP280) to open the plastic buckle and remove the SC000571X contacts.

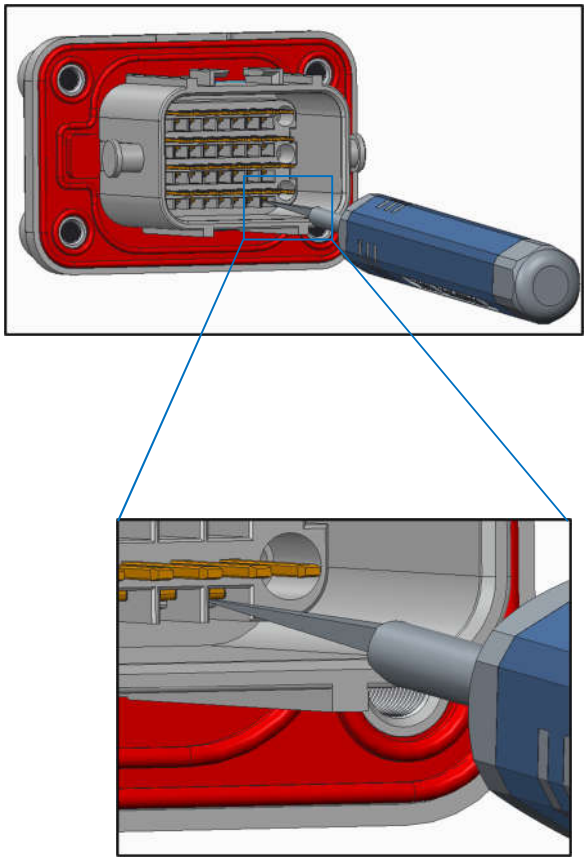

Step 9

Sectional view of tool and terminal matching for pick-up.

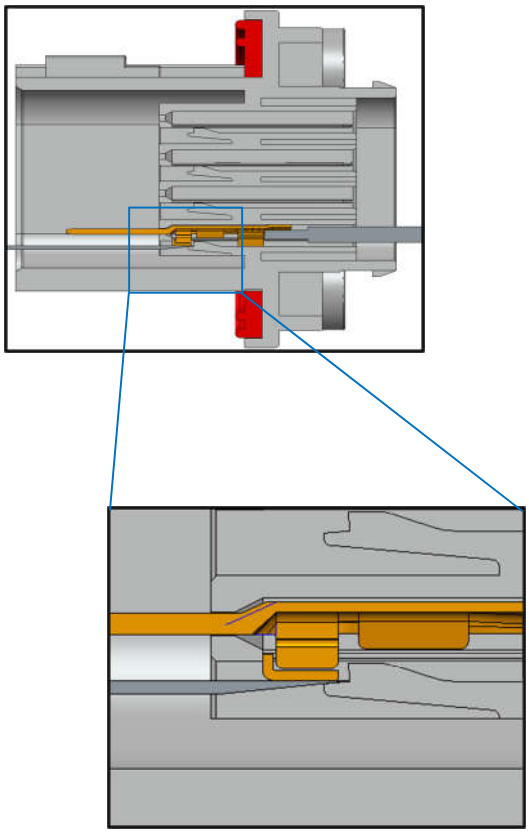

DuraLok ATV Plug: Contact Extraction

Step 1

Crimp socket contacts(SC000572X) to wire. See appropriate datasheets forapplication tool.

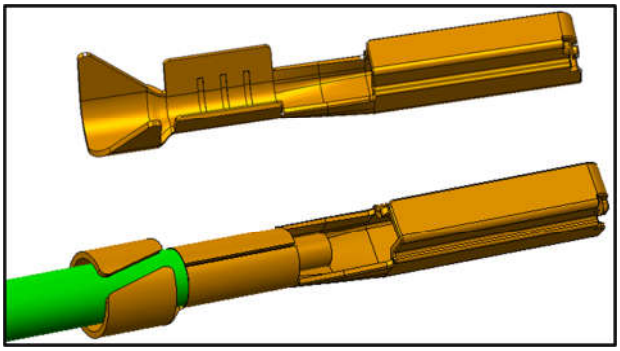

Step 2

Insert crimped contact through rear seal of plug.

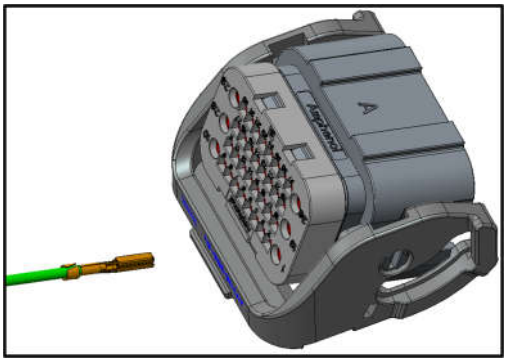

Step 3

Push contact straight into connector until a positive stop is felt.
A slight tug will confirm that it is properly locked in position.

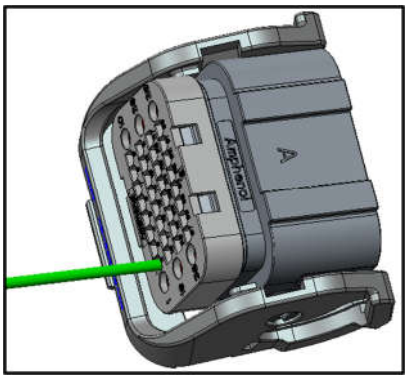

Step 4

Section View showing final position of contact for reference.

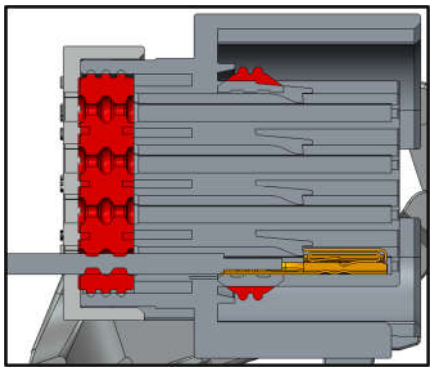

DuraLok ATV Plug: Contact Extraction

Step 5

Crimp socket contacts(SSXXM1X) to wire. See appropriate datasheets for application tool.

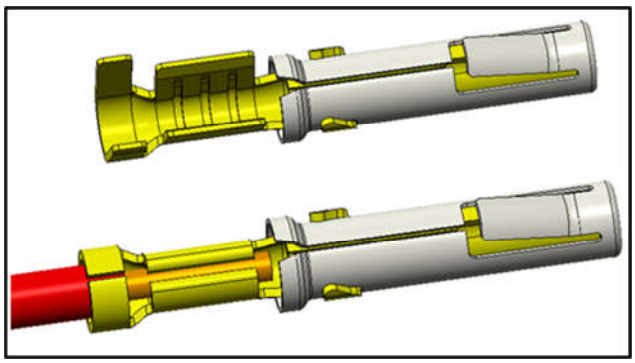

Step 6

Insert crimped contact through rear seal of plug.

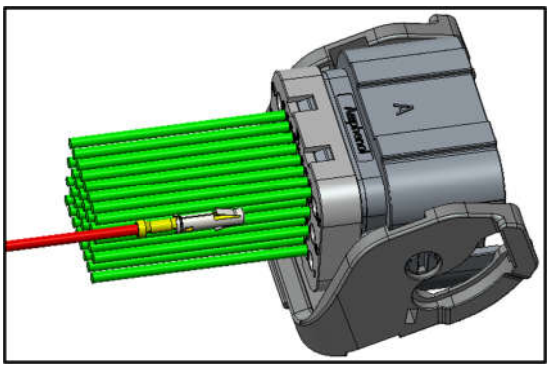

Step 7

Push contact straight into connector until a positive stop is felt.
A slight tug will confirm that it is properly locked in position.

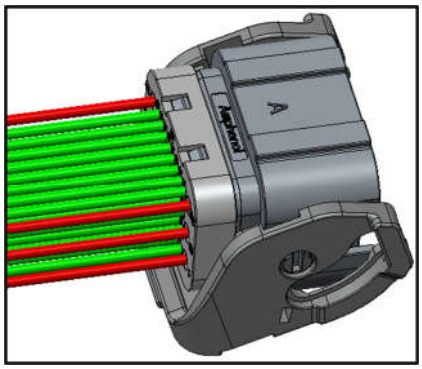

Step 8

Section View showing final position of contact for reference.

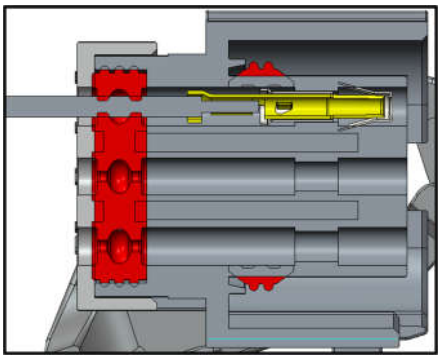

Step 9

Push the wedge vertically into plug after the wedge align to the Hole of the plug.

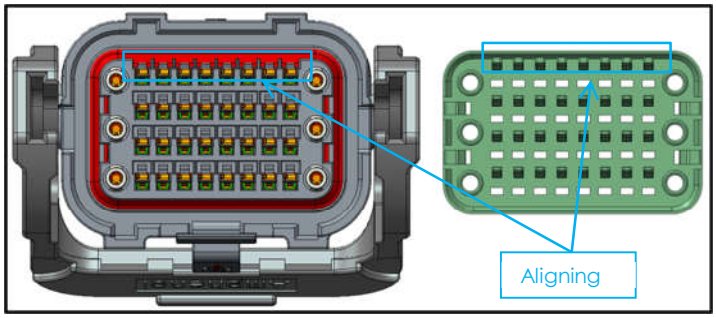

Step 10

Assemble wedge into the connector.

DuraLok ATV Plug: Contact Extraction

Step 1

Use the small end of the AT Extraction Tool(ATRT-100) to pry open the 2 side clasps and remove the Location Block.

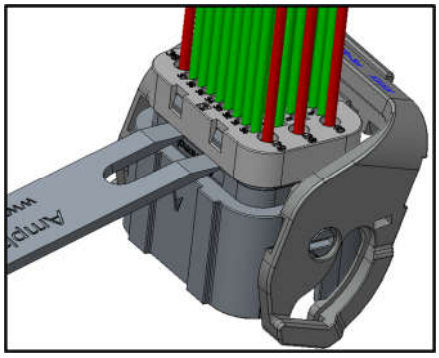

Step 2

Prize up removal tool until cover and wire seal out of connector.

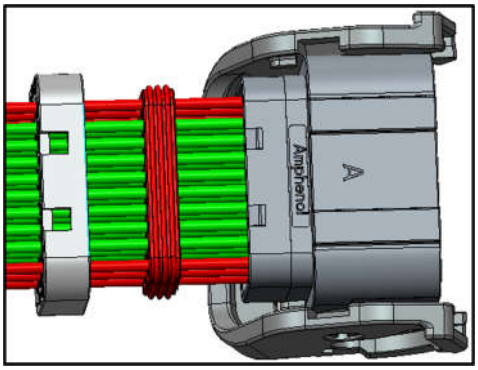

Step 3

Use one end of the AT Extraction Tool(ATRT-100) to extend the clamp of the pressure plate.

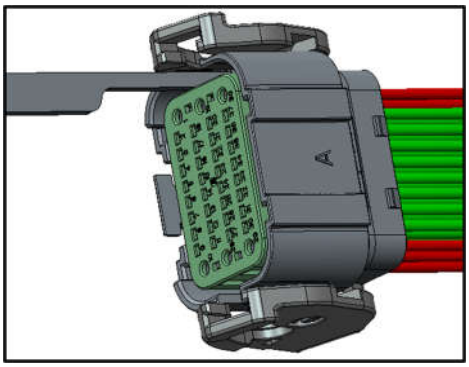

Step 4

Wrap the contact with the tool and push the cover out of the plug.

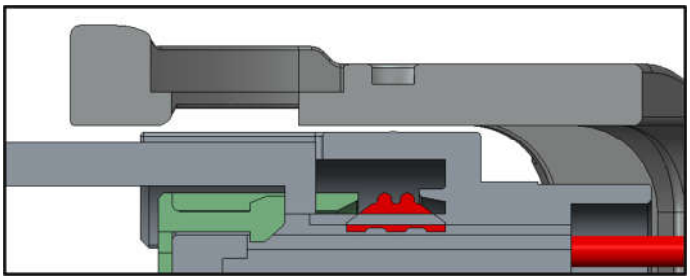

Step 5

The wedge out the connector.

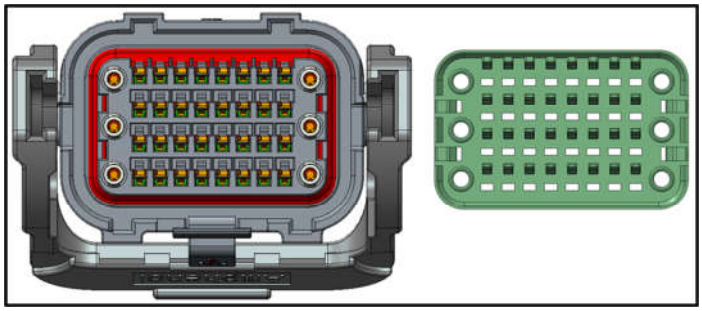

DuraLok ATV Plug: Contact Extraction

Step 6

Use a removal tool(QXRT16) to press the SSXXM1X contacts spring and remove it.

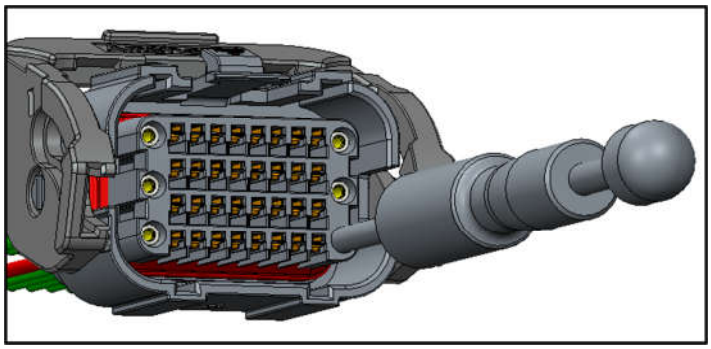

Step 7

Sectional view of tool and terminal matching for pick-up.

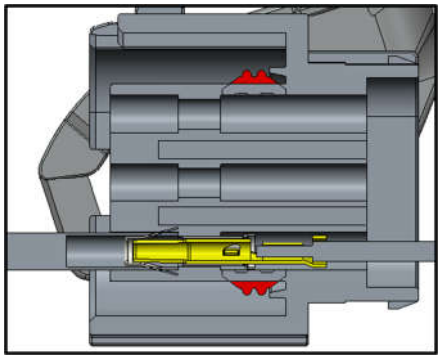

Step 8

Use a removal tool(DRK-DMP280) to open the plastic buckle and remove the SC000572X contacts.

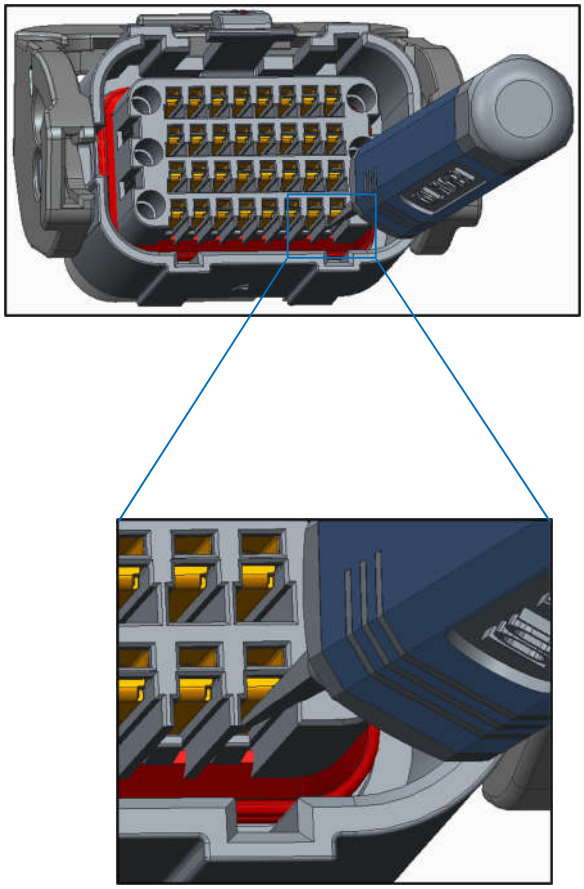

Step 9
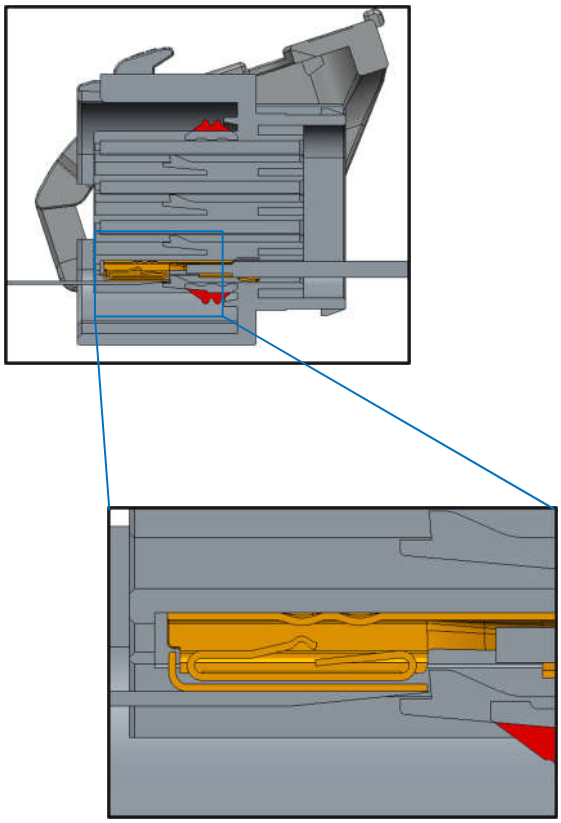
Sectional view of tool and terminal matching for pick-up.